LBNL-2001144

Lawrence Berkeley National Laboratory

A Thermodynamic Analysis of a Novel Bidirectional District Heating and Cooling Network

Rebecca Zarin Pass, Michael Wetter, Mary Ann Piette

Energy Technologies Area
April 5, 2018

Disclaimer

This document was prepared as an account of work sponsored by the United States Government. While this document is believed to contain correct information, neither the United States Government nor any agency thereof, nor the Regents of the University of California, nor any of their employees, makes any warranty, express or implied, or assumes any legal responsibility for the accuracy, completeness, or usefulness of any information, apparatus, product, or process disclosed, or represents that its use would not infringe privately owned rights. Reference herein to any specific commercial product, process, or service by its trade name, trademark, manufacturer, or otherwise, does not necessarily constitute or imply its endorsement, recommendation, or favoring by the United States Government or any agency thereof, or the Regents of the University of California. The views and opinions of authors expressed herein do not necessarily state or reflect those of the United States Government or any agency thereof or the Regents of the University of California.

Acknowledgments

This work was funded by Lawrence Berkeley National Laboratory through the Laboratory Directed Research and Development (LDRD) Program. This work was also supported by the Assistant Secretary for Energy Efficiency and Renewable Energy, the U.S. Department of Energy under Contract No. DE-AC02-05CH11231.

Cite as: Rebecca Zarin Pass, Michael Wetter and Mary Ann Piette.
A Thermodynamic Analysis of a Novel Bidirectional District Heating and Cooling Network.
Energy, Vol. 144, p. 20–30. 2018. DOI:10.1016/j.energy.2017.11.122

A Thermodynamic Analysis of a Novel Bidirectional District Heating and Cooling Network

Rebecca Zarin Pass, Michael Wetter and Mary Ann Piette

Building Technology and Urban Systems
Lawrence Berkeley National Laboratory
1 Cyclotron Road
Berkeley, CA 94720

April 5, 2018

Abstract

We evaluate an ambient, bidirectional thermal network, which uses a single circuit for both district heating and cooling. When in net more cooling is needed than heating, the system circulates from a central plant in one direction. When more heating is needed, the system circulates in the opposite direction. A large benefit of this design is that buildings can recover waste heat from each other directly.

We analyze the thermodynamic performance of the bidirectional system. Because the bidirectional system represents the state-of-the-art in design for district systems, its peak energy efficiency represents an upper bound on the thermal performance of any district heating and cooling system. However, because any network has mechanical and thermal distribution losses, we develop a diversity criterion to understand when the bidirectional system may be a more energy-efficient alternative to modern individual-building systems. We show that a simple model of a low-density, high-distribution loss network is more efficient than aggregated individual buildings if there is at least 1 unit of cooling energy per 5.7 units of simultaneous heating energy (or vice versa). We apply this criterion to reference building profiles in three cities to look for promising clusters.

Nomenclature

COP	Coefficient of Performance
DHC	District heating & cooling
div	Diversity of a district system
HX	Heat exchanger
$\dot{Q}$	Heat flow rate [W]
T	Temperature [K]
$\dot{W}$	Work flow rate [W]
η	Efficiency

1 Introduction

Over 54% of people worldwide live in urban environments (United Nations, 2015). As such, large city infrastructure projects have potential to affect progress toward sustainability goals. District heating and cooling (DHC) systems are often touted as a useful tool for meeting these goals. In their 2015 City Energy Efficiency Scorecard, the American Council for an Energy Efficient Economy gives cities sustainability "points" for the presence or intention to support district systems, regardless of quality (Mackres et al., 2015). District systems are not inherently more efficient than their individual alternatives. Depending on technology generation, maintenance, thermal load density in space, and thermal load diversity between heating and cooling in time, the efficiency can vary immensely. Determining the optimal levels of density and diversity, and projecting where such levels will exist in the coming decades, are ongoing topics of research (Nielsen and Möller, 2013). In planning for large-scale city retrofits, as well as new installations that can last decades, it is crucial to understand how the best, modern district systems compare energetically to the best, modern individual building systems. Here we attempt to do that.

1.1 History of DHC Systems

Lund et al. (2014) divide the history of district heating into four generations. The original systems were built in the late 1800s and distributed steam primarily to remove the risk of boiler explosions from individual residences. Many of these systems still exist and visibly leak extensively. While not necessarily efficient by modern standards, these systems still provide a range of benefits over individually supplied systems. First, economies of scale can enable investment in more sophisticated systems than any individual building owner could afford or justify. This can include utilization of operationally-intensive systems such as biomass, combined heat and power, or thermal storage (Cooper and Rajkovich, 2012; Rezaie and Rosen, 2012). The centralization of equipment and control can also ease the maintenance burden at each individual building and free up space previously used for heating, ventilation, and air-conditioning (HVAC) equipment (Rezaie and Rosen, 2012).

The second generation is characterized by pressurized liquid water instead of steam, typically still over 100°C (Lund et al., 2014). Using liquid reduces thermal losses in the distribution network and improves the efficiency of the building-side heat coils. It also enables easier integration with sources of waste heat, such as in combined heat and power plants. Heat recuperation is also possible between buildings on the system, allowing for benefits from complementarity, when buildings have simultaneous opposite needs for heating and cooling. In Seattle, the waste heat from a Westin Building data center will heat the new nearby Amazon offices, saving about four GWh/year (Bhatt, 2015). Relative to the earlier generation steam systems, lower temperatures here make thermal storage systems more efficient due to reduced heat transfer losses. However, the system still has to be sized for the anticipated loads and is not easily expanded or retrofitted to include additional buildings beyond initial design capacity.

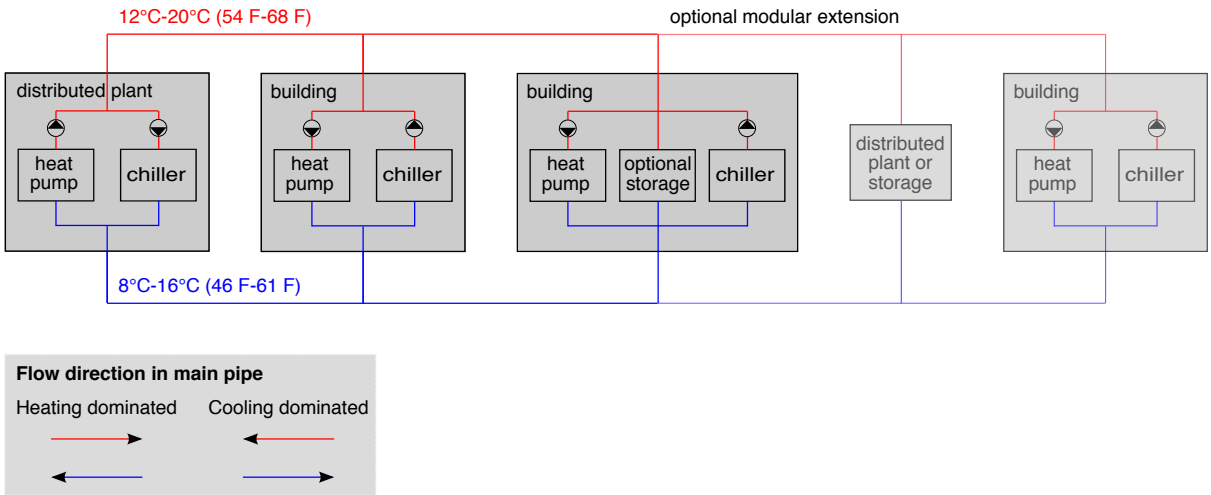

Figure 1: An example bidirectional a distributed plant, 3 buildings, and network storage.

As the district water temperature decreases below 100°C, integration with solar thermal and ground-source heat exchange becomes more efficient. This additional fuel flexibility marks third generation systems and can provide both CO_2 reduction and resiliency benefits to the network. There are new opportunities for aggregated demand response to minimize peak electric loads and/or balance integration of intermittent renewables on the electric grid.

The newest, 4th generation, systems are often called "ambient" for supplying water near room (or mild outdoor) temperature. Some of these systems even forgo distribution line insulation because the thermal losses are so low (Schluck et al., 2015). At such low temperature lifts, electric heat pumps and chillers become very efficient and can be used to boost temperatures up and down at either a central plant or the individual buildings. These networks typically serve energy-efficient buildings so that the heating coil sizes are still reasonable despite the small temperature differences between the district ambient water and the internal heating and cooling systems. The ability to modulate temperature at each building means that the district no longer has to be temperature-controlled for the worst building.

1.2 Bidirectional DHC Systems

Historically all DHC systems have been "unidirectional", meaning that the water in each pipe segment only flows in one direction. Separate circuits are needed for heating and cooling. In this paper we refer to a "bidirectional distribution" system as one in which the water in each pipe segment can flow in alternating directions, depending on the net thermal fluxes on the system. In this case, there is a single network for both district heating and cooling. As shown in Fig. 1, the network can either receive or donate heat locally. This thermal distribution system functions much like the electrical grid, which can convey energy both from a centralized generator to a consumer and back from a rooftop PV into the grid. A significant additional benefit of this design is the capacity for waste-heat recovery at each building. In the case where buildings can meet each other's loads, no flow rate is required through the central plant. The Swiss Competence Center for Energy Research is actively building and monitoring such bidirectional systems (Schmidt, 2014; Schluck et al., 2015).

Figure 1 shows an example schematic of a bidirectional system.[1] In net heating mode, the plant guarantees delivery of water between 12-20°C and in net cooling mode, between 8-16°C. The near-ambient temperatures maximize efficiency of the building-side heat pumps. Unlike central DHC, the bidirectional system need not be operated to serve the lowest and highest temperature needs. Rather, each individual building is equipped with heat pumps so that it can modulate its own chilled and hot water loops up or down in temperature from

[1]Other research papers analyzing similar ring networks exist, but don't tend to refer to them as "bidirectional". This is because they use a two-pipe system: one for heating and one for cooling .

Table 1: Parameters for bidirectional model.

End Service	**Supply/Return T** (℃)
Space Heating	30/26
Space Cooling	18/22
Component	**Value**
plant heat set point	12℃
plant cool set point	16℃
heat pump COP	$0.3\,T_{cond,in}/(T_{cond,in} - T_{evap,in})$
chiller COP	$0.3\,T_{evap,in}/(T_{cond,in} - T_{evap,in})$
air-side HX pressure drop	400 Pa
water-side HX pressure drop	40,000 Pa
air-side HX temperature change	4 K
water-side HX temperature change	4 K
minimum HX pinch ΔT	2 K
length per distribution pipe (high density)	0 m
length per distribution pipe (low density)	5,000 m
distribution pipe pressure loss	200 Pa/m

the main network. The system has the benefit of being modular, such that more buildings and generators can be added in time.

Exergy is a measure of the potential of a resource to do work and is the absolute efficiency benchmark imposed by physics. It combines the first and second laws of thermodynamics to account for both energy quantity and quality. An exergy analysis comparing the bidirectional system to a unidirectional 4th generation heating system with the same end loads found that the bidirectional system had 1.6x the exergy efficiency of the unidirectional system (Schluck et al., 2015). These numbers were calculated for both a theoretical model as well as an ongoing full-scale demonstration site. This is an active area of research and there remain both practical problems, such as managing complicated hydraulics, and strategic questions, such as how well this bidirectional system translates to different locations and different energy load profiles (Mennel et al., 2016).

However, with the option to use individual heat pumps and chillers, it is possible that the added expense and complication of a coordinated district among multiple owners crossing public property is not a huge benefit. Here we explore the extremes of high and low diversity and density to ask when and why bidirectional systems thermodynamically outperform modern individual building alternatives.

The remainder of the paper is structured as follows: Section 2 presents the methodology and introduces the system architectures that will be used in two model problems: the first theoretical and the second more applied, discussed in Sections 3 and 4, respectively. Section 5 has conclusions and next steps in moving from a thermodynamic assessment to a practical system implementation.

2 Methodology

The purpose of this paper is to compare the thermodynamic performance of modern individual and district thermal systems for differing load diversities and densities. We will identify the overall system efficiencies, as well as the sources of inefficiency in each sub-process. Understanding these losses can indicate where and how changes to the system could lead to efficiency gains, and therefore fuel savings. To do this we will use exergy analysis. Exergy allows for direct comparison between systems with different types of energy flows. While all of the energy systems in this study are electric, often district systems incorporate a range of resources, which can be appropriately-valued thermodynamically using exergy.

2.1 System Architectures

Both the individual and district systems are designed for buildings with near-ambient space heating and cooling. This allows for the use of low-lift electric heat pumps and chillers. For ease of comparison, the individual and central plant heat pumps and chillers are air-source. In the district case, the distributed building-side heat pumps and chillers operate off of the network water. The only externally supplied resource is electricity, which is used for the heat pumps, chillers, and flow work to circulate the air and water.

Numerical models of both the individual building and district systems were made in the equation-based and object-oriented language Modelica using Dymola and the open source Buildings Library developed by the second author (Wetter et al., 2014). Key design parameters are given in Table 1.

All heat pumps and chillers are modeled with coefficients of performance equal to 30% of their Carnot values. Scaling the COP based on the Carnot efficiency is a first-order approximation that does not favor a particular product, and that is not subject to the extrapolation errors that may be obtained if manufacturer performance data were extrapolated to low-lift operating conditions. In addition, using the Carnot-analogy does not immediately bias efficiency in favor of the district system with its 2-stage temperature lift occurring first at the central plant and then at the building.[2] The Carnot efficiency of 30% has been selected based on simulations using Chiller performance data that are distributed with the EnergyPlus software (Crawley et al., 2001). The temperature differences of the evaporators and condensers are 4 K along a stream from inlet to outlet at full and part load, which are typical design values for such systems, and are also used by (Schluck et al., 2015). The distribution pipe pressure loss of 200 Pa/m is a typical design value (Nussbaumer et al., 2017) and the heat exchanger pressure losses are design values based on engineering judgment.

The few existing bidirectional systems have found that thermal losses in the distribution are minimized and therefore obviate the need for pipe insulation when the system is kept between 8-20°C at all times (Schluck et al., 2015). Furthermore, if the cold side of the network is maintained below the building space cooling temperature, then the buildings don't need chillers and have simple heat exchangers for free-cooling. High efficiency space cooling systems can operate at 18°C or even higher, meaning that the network needs to deliver cool water at or below approximately 16°C, allowing for a small temperature difference across a heat exchanger. Thus, here we maintain the cold side of the network between 8-16°C and the hot side between 12-20°C. This translates to the plant turning on the heat pump when the water goes below 12°C in net heating mode and turning on a chiller when the water goes above 16°C in net cooling mode.

2.2 Presentation Format

The work that follows is split into two model problems. The first is a theoretical exercise that allows for exploring the value of district load diversity and density. The principles discerned from this exercise are applied in the second model problem, which searches for building clusters conducive to high-performance districts in three climatically different American cities. Both model problems have the same format: a) Problem Formulation, b) Optimization Approach, and c) Results.

3 Model Problem 1: Theoretical Loads

3.1 Problem Formulation

The first model problem has two buildings: one only requires cooling and the other only requires heating. The load for both buildings is constant in time. While this scenario is not particularly realistic, by varying the relative magnitude of each building's load, we can explore the entire range of cooling to heating ratios for a district. This district could be served by individual systems, as shown in Fig. 2a, or by a bidirectional network, as in Fig. 2b. At the bottom of Fig. 2b, an air-source chiller and heat pump serve as the central plant. The flow work required to force air through these systems is indicated with fans as $\dot{W}_{P0}$ and $\dot{W}_{P1}$. The central plant regulates the temperature of the district water, represented by the purple lines. The district water temperature is kept low enough that after traveling through some amount of pipe to the first building

[2] Other efficiency formulations would lead to a benefit to the cascaded heat pumps and chillers, which would automatically result in a higher efficiency for the district over the individual, non-cascaded systems.

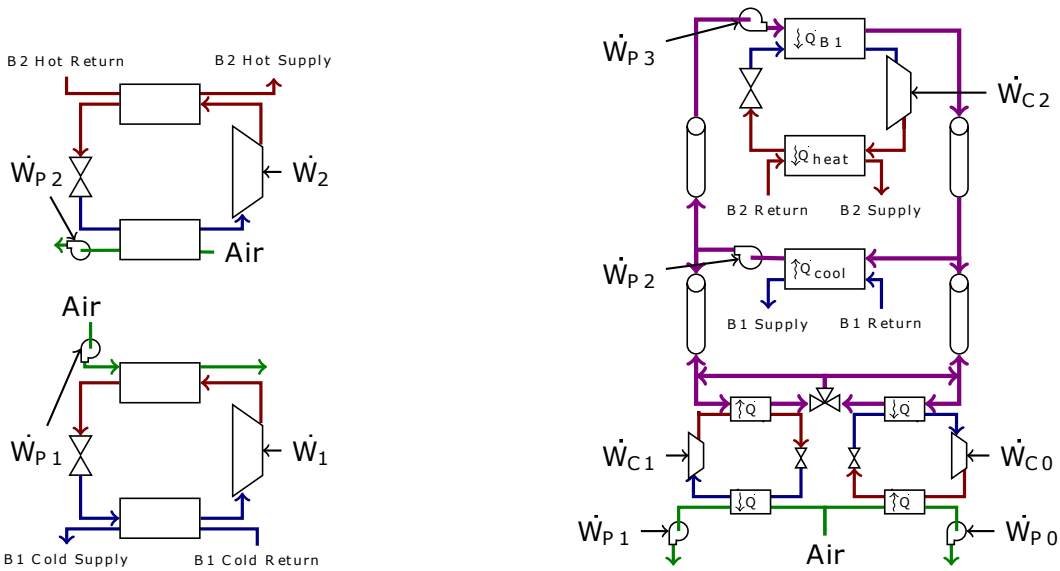

(a) Isolated buildings

(b) Networked buildings

Figure 2: Schematics for a two building system. Building 1 only needs cooling, Building 2 only needs heating.

(B1), it can supply "free" cooling through a simple heat exchanger (represented as $\dot{Q}_{cool}$). The district water can also provide heating as necessary to the second building (B2) through a designated heat pump at the top of the diagram. The energy required to circulate the district water is supplied by pumps at each building, designated in the diagram $\dot{W}_{P2}$ and $\dot{W}_{P3}$.

The efficiency of a district system is a function of load density, so "high density" and "low density" scenarios are used. The high density case assumes that the four distribution pipes shown in Fig 2b have zero length. The low density scenario assumes they are each five kilometers long. While these values are unrealistic, they provide upper and lower bounds on the density and associated distribution pumping losses of a more typical system.

3.1.1 System Analysis

To analyze the thermodynamic performance of the individual and network systems, we look at their exergy distributions. We will assume an outdoor air temperature, T_0, of 5°C, which could plausibly require both space heating and cooling loads. The temperature allows for free cooling at the central plant– the chillers operate as short-circuited direct heat exchangers between the outdoor air and the water network. For any desired ratio of heating-to-cooling end loads, and any desired network pipe length (used as a proxy for load density), a Modelica simulation is run to determine the thermodynamic properties at each point in the network. These properties are then used to calculate the exergetic flows.

The exergy content of the desired heating and cooling loads can be written as

$$\dot{\Psi}_{load} = \dot{Q}_{cool}\left(1 - \frac{T_0}{T_C}\right) - \dot{Q}_{heat}\left(1 - \frac{T_0}{T_H}\right) \tag{1}$$

where $\dot{\Psi}$ is flow exergy, $\dot{Q}_{cool}$ is the energy to cool building 1, $\dot{Q}_{heat}$ is the energy to heat building 2, T_H is heating supply temperature (30°C), and T_C is the cooling supply temperature (18°C). All of the exergy input to the system is in the form of compressor and pump work. In the case of the networked system, this work occurs at both the individual buildings and the central plant, and its exergy is

$$\dot{\Psi}_{input} = \dot{W}_{pumps} + \dot{W}_{compressors} \tag{2}$$

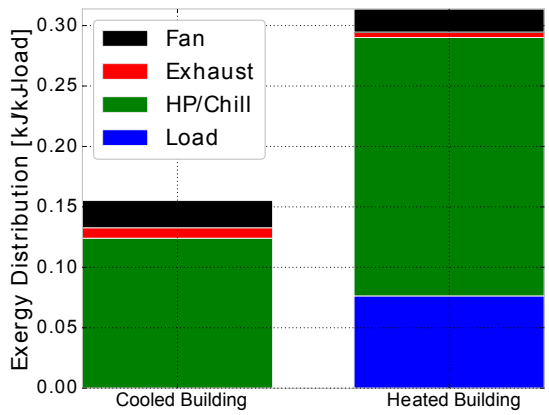

Figure 3: Exergy distribution for isolated building air-source heat pump and chiller. Outside air at 5°C.

The exergy efficiency, η_X, is defined as the ratio of the exergetic load to the exergetic input.

$$\eta_X = \frac{\dot{\Psi}_{load}}{\dot{\Psi}_{input}} \tag{3}$$

Figure 3 shows where the incoming exergy (electricity) ends up being used in the isolated building systems, shown in Fig. 2a. The vertical axis shows exergy divided by the thermal energy load at the building. The total height of the bars indicate the total quantity of electricity required to heat or cool the building. More than twice the electricity is required for the heated building than the cooled building, which makes sense in a 5°C environment.

However, for the heated building, only a small fraction of the exergy is actually present in the end load, represented in blue: the four-degree temperature rise from 26°C to 30°C for the space heating water. In the individual cooled building, none of the exergy is required for the end load: the four-degree temperature drop from 22°C to 18°C in the space cooling water. This is because in a 5°C atmosphere, the process of cooling from 22°C to 18°C would happen automatically given sufficient time. In fact, electricity could hypothetically be produced in a heat engine operating between the 22°C return water and 18°C supply water. Thus, any exergy expended to do this cooling is by definition wasted and the exergy efficiency will always be zero for cooling in a 5°C environment.

In both buildings, the vast majority of the exergy is destroyed in the heat pump and chiller themselves (labeled "HP/Chill" and shown in green). This is due to thermal diffusion across the heat exchangers, as well as an imperfect compressor in the heat pump. (Recall that the chiller is short-circuited at this atmospheric temperature and therefore is not running a compressor.) Another 15-20% of the exergy is destroyed by the fan circulating the air, shown in black. Finally, the red area shows the thermal exergy that is lost to the exhaust. This represents the quantity of electricity that is taken in by the system and then ultimately converted to thermal energy rejected to the environment. This exergy could have been recuperated if the buildings were linked in a district and shared this resource. Furthermore, every unit of recuperation results in one less unit of thermal energy that had to be provided through the imperfect heat pump and chiller. Thus, while the exhaust exergy destruction is not an enormous percentage of the overall destruction, perfect recovery of this thermal resource could significantly increase the heated system's efficiency.[3]

Figure 4 shows the exergy distribution of the networked system, shown in Fig. 2b, over the entire range of possible space cooling-to-heating load ratios, for both the high-density and low-density cases. The district systems have water-to-water heat pumps and chillers in the buildings. For short distribution lines, the pumps needed to circulate the liquid district water use significantly less energy than the fans needed to circulate air at the plant. Thus, by using a combination of water and air-based systems, the high-density district

[3]In the cooling-dominated case, recuperation of the thermal resource could reduce the absolute quantity of electricity used, but it would not increase the efficiency, which is by definition zero.

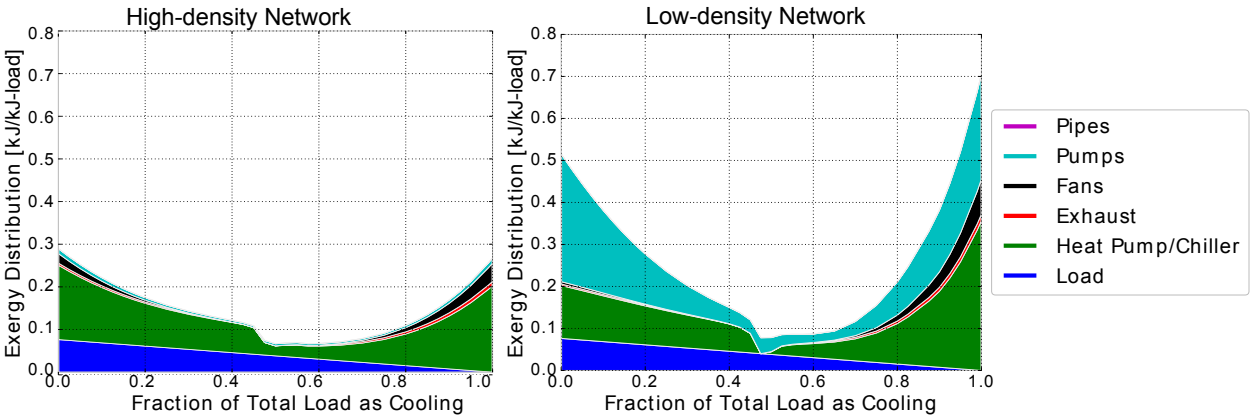

Figure 4: Exergy distribution for high density and low density district system. Outside air at 5°C.

destroys less exergy in flow work machinery than the isolated buildings. The low-density network has such large pressure drops along the distribution pipes that this benefit is lost, and in fact, reversed. The pressure losses are asymmetric with respect to the cooling-to-heating load ratios due to the increased distribution losses in reaching the building farther from the plant, the heated building. This choice was arbitrary and could have been reversed in the model. The exhaust exergy destruction is almost completely eliminated in both district cases because the plant provides minimal temperature lift and the air is released with minimal change in thermal energy.

The plots in Fig. 4 indicate a discontinuity in exergy distribution when approximately half the total load is cooling. This jump is better explained in Fig. 5. The top plot shows the district water temperature at the inlets and outlets of both buildings as well as the central plant. The bottom plot shows the flow rate of the water through the plant. When the load is heating dominated (left half of the plots), the district flow rate is positive through the plant, meaning that the heat pump is active and 12°C water is provided. The heated building (Bldg 2) receives water near this temperature, but not exactly 12°C because the district water is mixed with that coming from Building 1, whose output temperature is dependent on the load of that building. Similarly, the return temperature to the plant is near 8°C, as would be expected for a system with a hot-side near 12°C and a 4 K temperature difference along the evaporator. But this temperature changes as a function of the load.

The discontinuity in the plot occurs when the load shifts from heating-dominated to cooling-dominated. At this point, the flow rate through the plant reverses direction and water is released out of the cold side of the plant at the 16°C set point designed to allow free cooling. The cooled building exhausts heat to the district water, raising its temperature to near 20°C. This water splits directions, some of which reenters the plant and some of which goes to the heated building. This new 16/20°C district regime results in a significant reduction in the temperature lift at Building 2's heat pump. This is what is reflected in the discontinuity in Fig. 4. As the cooling load continues to increase, this benefit is diluted by the increased temperature difference at the air-side chiller.

Figure 5 was made by plotting the steady-state operating point for separate district systems at each possible cooling-to-heating load ratio. A real system would not have such discontinuities in temperature. The volume of water in the distribution pipes would act as a thermal capacitor and result in slower changes in water temperatures. However, the steady-state operating point would be as indicated in Fig. 5. It is also important to note that a real system would not likely be a network of two buildings in parallel with guaranteed loads, but of potentially more buildings in various topographical combinations of varying loads.

3.2 Optimization Approach

The above graphs indicate that system efficiency and operating points are highly dependent on the load diversity and ability to share waste heat and cooling. In this section, we propose a quantitative metric to evaluate the potential for buildings to share waste heat. This will be related to the fraction of buildings

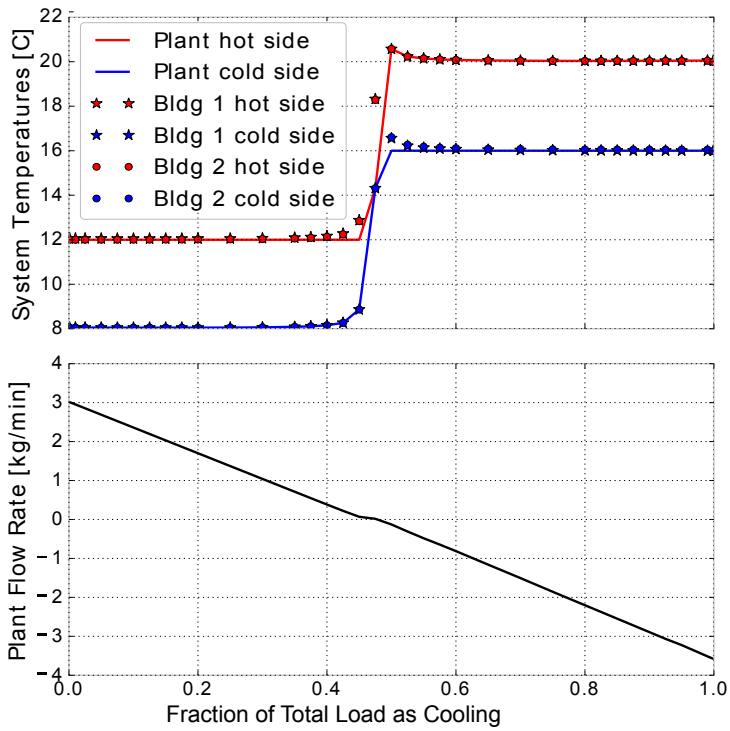

Figure 5: Effect of relative heating/cooling load on plant flow rate and temperatures.

requiring heating at the same time as other buildings need cooling. Section 4 will then show how this diversity metric can be used to evaluate the relative thermodynamic merit of a bidirectional network versus individual building systems for a particular candidate building cluster.

For other city services, Salat (Salat et al., 2011) suggested a diversity between 0 and 1, where 1 is complete balance of diversity and 0 is complete dominance of one category. He used the modified Simpson index

$$div = \frac{C}{C-1}\left[1 - \sum_{i=1}^{C} p_i^2\right] \tag{4}$$

where div is the diversity, C is the number of categories and p_i is the frequency of occurrence of each category, i. For example, if the desired diversity was in land zoning of a city by area, there could be three categories: area of residential, commercial, and industrial zones. The p_i for each category would be the percentage of the city land covered by that category. If the three categories had equal area, then the calculation would yield:

$$\begin{aligned} div &= \frac{3}{2}\left[1 - \sum_{i=1}^{3} p_i^2\right] \\ &= \frac{3}{2}\left[1 - \left(\frac{1}{3}\right)^2 - \left(\frac{1}{3}\right)^2 - \left(\frac{1}{3}\right)^2\right] \\ &= \frac{3}{2}\left[1 - \frac{3}{9}\right] = \frac{3}{2} * \frac{2}{3} = 1 \end{aligned}$$

If on the other hand a single zoning type covered all of the city land, the calculation would result in

$$div = \frac{3}{2}\left[1 - 1\right] = 0$$

For our purposes, we will define perfect diversity as equal quantities of the 2 categories of heating and cooling *as seen by the district thermal network at the buildings* at a given time. This will result in no work requirement at a plant. Referring to the diagram in Fig. 2b, this means

$$\dot{Q}_{cool} = \dot{Q}_{B1} \tag{5}$$

where a positive quantity means heat flows in the direction of the arrow in Fig. 2b. We can then rewrite the heat transfer terms in Eqn. 5 in terms of the other work and heat transfers at each building to be

$$\dot{Q}_{cool} = \dot{Q}_{heat} - \dot{W}_{C2}$$

The work term can then be written in terms of the heat pump coefficients of performance[4] so that

$$\dot{Q}_{cool} = \dot{Q}_{heat}\left(1 - \frac{1}{COP_{heat}}\right) \tag{6}$$

The left and righthand sides of Eqn. 6 give the desired categories for the diversity calculation in terms of variables we care about: the building-side thermal loads and the equipment COPs. Substituting these two categories into the diversity calculation in Eqn. 4 gives a diversity equal to

$$div = 2\left[1 - \left(\frac{\dot{Q}_{cool}}{\dot{Q}_{cool} + \dot{Q}_{heat}(1 - \frac{1}{COP_{heat}})}\right)^2 - \left(\frac{\dot{Q}_{heat}(1 - \frac{1}{COP_{heat}})}{\dot{Q}_{cool} + \dot{Q}_{heat}(1 - \frac{1}{COP_{heat}})}\right)^2\right] \tag{7}$$

With the formulas provided in Table 1, the network temperatures simulated in each Modelica scenario are used to calculate the equipment COPs. With the COPs, the diversity can be calculated for a static situation using Eqn. 7.

3.3 Results

The diversity in Eqn. 7 is now applied to the two-building, one-plant schematic in Fig. 2b. The outside air temperature is again fixed at 5°C.

Figure 6 shows the exergy efficiency of the entire 2-building/district system as a function of the diversity. The different diversity values were accomplished by changing the ratio of loads between the all-heating and all-cooling building. Because the same diversity can be achieved by either a heating-dominated or a cooling-dominated system, these situations are separated and labeled accordingly. For comparison to the individual building systems, the blue and red dashed lines show the exergy efficiency of a proportional combination of individual building air-source heat pumps and air-source chillers.

In all district cases, there is a direct correlation between diversity and exergy efficiency, indicating that our diversity metric does have significance for system performance. This is not true for the combination of individual building systems because the heat pumps as modeled always have higher COPs than the chiller. The curvature of the district efficiency-diversity relationship shows that the greatest marginal gains in efficiency happen with changes nearest to perfect diversity ($div = 1$). The near vertical jump in efficiency of the heating-dominated systems approaching perfect diversity reflects the shift in plant flow direction and temperature regime already discussed in Fig. 5. In a system that is relatively well balanced, this may indicate a significant value for short-term storage and aggregated demand response in order to tweak the buildings to a slightly higher overall diversity.

As expected, the high density cases have higher exergy efficiency than the corresponding low density cases. The larger difference between high and low density scenarios in heating mode versus in cooling mode is an artifact of which building was closer to the plant. The high density case is almost equivalent to the isolated systems at the zero diversity extremes. Thus for a system with any distribution losses (intermediate density), the district is less efficient than the isolated systems at low diversity. Using the low density case as a worst-case scenario, the district is more efficient than the isolated systems between the two vertical dashed lines. On the cooling-dominated side, this occurs at a diversity of approximately 0.45; on the heating side, approximately at 0.57.

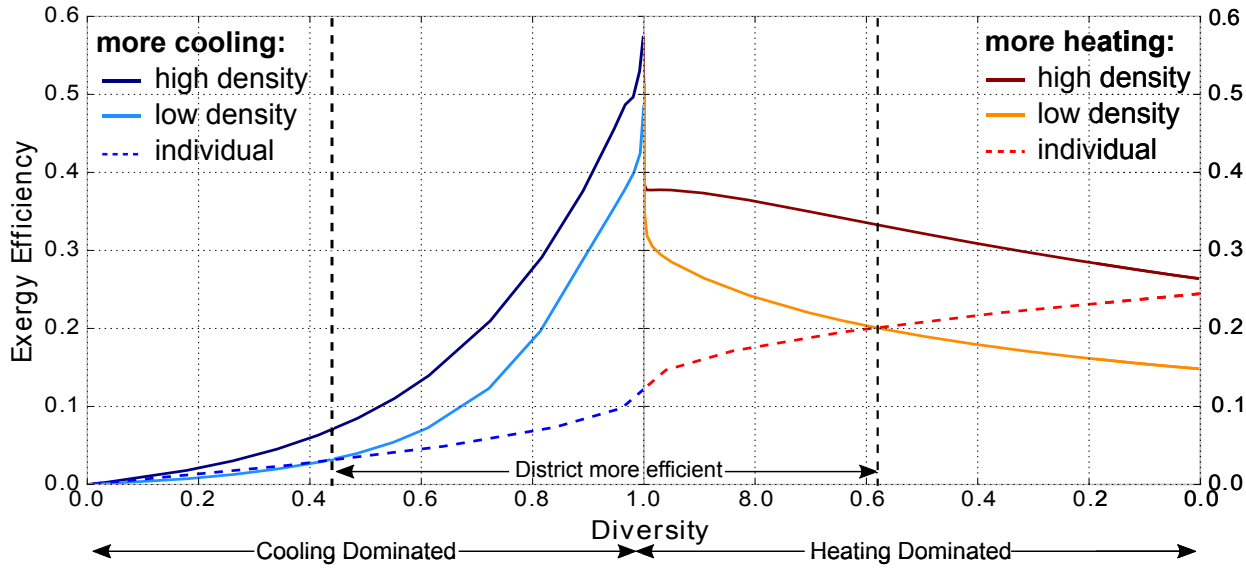

Figure 6: Affect of diversity on system performance.

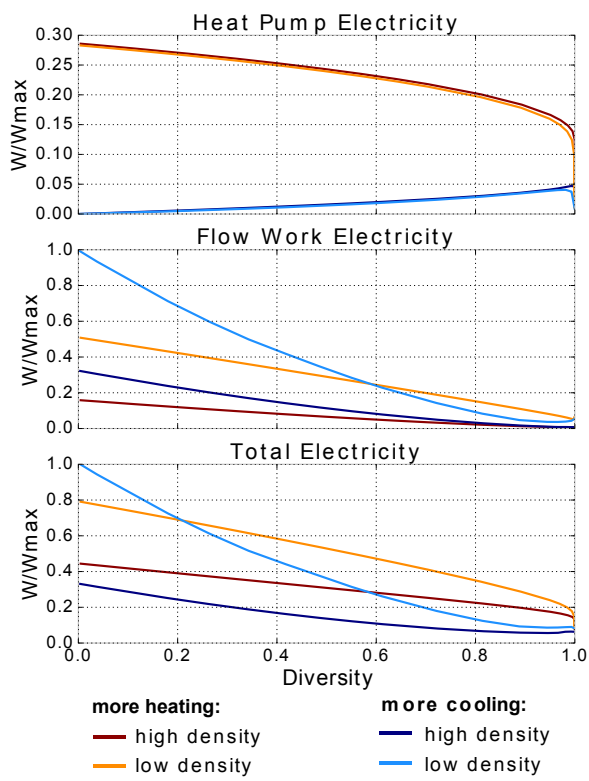

Figure 7: Affect of diversity on system performance.

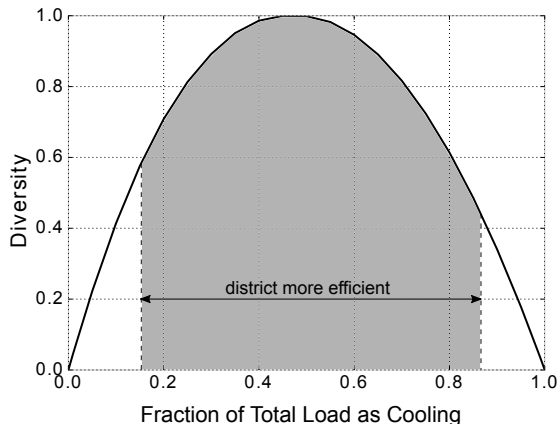

Figure 8: Diversities of different ratios of cooling to heating load.

Figure 7 shows where work is being expended in the district system. All three sub-plots are normalized by the maximum total work, which occurs in the all-cooling, low-density case. In almost all cases, the electricity needs are dominated by the flow work: pumps and fans in both the plant and buildings. This work steadily decreases as the diversity increases for two reasons. First, because less water has to circulate through the plant and the pressure drops in the associated plant-side pipes and heat exchangers are reduced. Second, because less air has to circulate through the plant, and as already discussed, per unit thermal exchange, the flow rates of air are higher than those of water and the fans are more work-intensive per unit pressure rise than the pumps. Both cooling-dominated cases require significantly more flow work than the two heating-dominated cases. This is because all of the cooling occurs in the plant, with its associated large fan energy requirement.

Figure 8 shows the relationship between diversity and relative heating and cooling loads in the two-building system. Because of the asymmetric heating and cooling COPs, the diversity calculation in Eqn. 7, is shifted such that perfect diversity is attained when there is slightly more end-use heating demand than cooling demand. Above we determined the diversity cutoffs for the district system to be more thermodynamically efficient than the individual systems. The resulting region is shaded in gray. The bounds of this region occur when the ratio of cooling load to heating load (and the inverse ratio) is no greater than 5.7. While these exact numbers are specific to this example, the assumptions on flow friction used to derive them are quite conservative. This analysis indicates that even at relatively unbalanced ratios of heating and cooling needs there is likely a direct efficiency benefit of using a district system to recover waste heat, even with mechanical distribution losses. This does not account for the added opportunities that districts provide to do thermal storage or invest in more sophisticated/aggregated equipment and control algorithms.

4 Model Problem II: Promising Building-Type Clusters

4.1 Problem Formulation

Knowing a building, or a group of buildings' diversity allows us to predict the efficiency benefit associated with a bidirectional network. As a first estimate of promising building types and clusters, we can use standardized hourly load profiles for different building types in various climates. Climate affects both the end loads through prevailing construction practices and comfort requirements and the supply efficiency through heat pump temperature and needs for dehumidification. Here we use the commercial and residential reference building models computed in EnergyPlus using typical meteorological year (TMY3) data for various climates (Deru et al., 2011; Wilcox and Marion, 2008; National Data Buoy Center, 2016; Office of Energy Efficiency & Renewable Energy, 2013). In all cases we use the simulations associated with the most modern building

[4]In a system without free-cooling at the buildings, this equation could be easily adapted to include the chiller COP.

City	HDD (°F-days)	CDD (°F-days)
Denver	5648	693
Phoenix	685	5066
San Francisco	1911	327

Table 2: Climate properties for modeled buildings. HDD = heating degree days, CDD = cooling degree days.

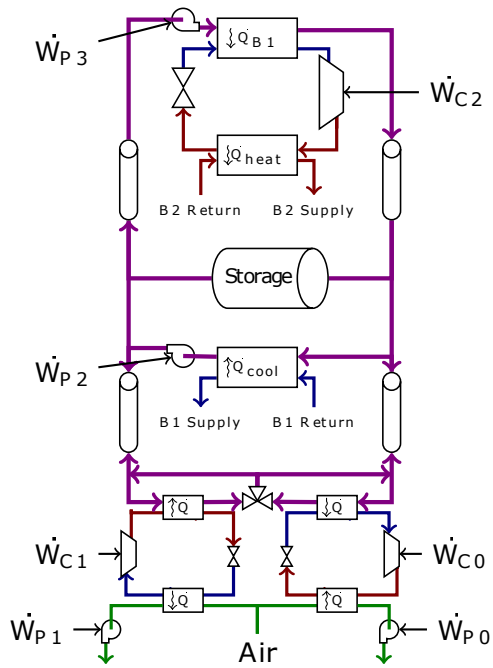

Figure 9: District with thermal storage tank.

vintage (2004). Among other fields, the data files for these reference buildings contain hourly heating, cooling, and hot water loads for a typical building of the selected type in the selected climate.[5]

At this point we have not addressed humidity management[6] so we will use relatively dry example locations: San Francisco, Phoenix, and Denver. For each of these cities, the heating and cooling degree days (HDD/CDD), both on a 65°F/18.3°C basis, are given in Table 2 (Weather Underground, 2016).

4.1.1 Storage

As Fig. 8 showed, small changes in the relative heating and cooling ratios can lead to significant changes in diversity, and therefore efficiency. Whereas in Sec. 3, the loads were constant in time, here the load profiles are dynamic and it is possible that thermal storage could be used to shift the timing of cooling and heating loads to maximize efficiency. We will implement a simple storage model, as shown in Fig. 9, in which a single water tank can be used for both hot water storage (top portion) and cold water storage (bottom portion). The total capacity of the water tank is sized such that

$$cap = \frac{0.25N}{8760} \sum_{h=1}^{8760} \dot{Q}_{heat,h} - \dot{Q}_{cool,h} \tag{8}$$

[5]These models are known to provide low estimates of building energy intensity, but provide a reasonable sense of load schedules and therefore diversity potential (Deru et al., 2011).

[6]This could potentially be handled within each building with a designated chiller also attached to the district network.

where N is the design hours of storage capacity, $\dot{Q}$ is the thermal load on the district network (sign always positive), and h is the current hour in the year. At every hour, a simple algorithm is used:

1. Calculate instantaneous load imbalance
2. If imbalance (hot/cold), try to extract (cold/hot) water from storage to reduce imbalance.
3. If (hot/cold) imbalance remains, add (hot/cold) water to storage if capacity available.
4. Run district (chiller/heat pump) to accommodate any remaining (hot/cold) imbalance.

4.2 Optimization Approach

The reference buildings have load profiles for domestic hot water, which will be assumed delivered at 60℃ through an additional heat pump attached to the network per building. There are still only two categories in our diversity calculation: heating and cooling. However now there are two temperature levels of heating, which requires the adjustment to Eqn. 7:

$$div = 2\left[1 - \frac{\dot{Q}_{cool}^2 + \left(\dot{Q}_{heat}(1 - \frac{1}{COP_{heat}}) + \dot{Q}_{hotwat}(1 - \frac{1}{COP_{hotwat}})\right)^2}{\left(\dot{Q}_{cool} + \dot{Q}_{heat}(1 - \frac{1}{COP_{heat}}) + \dot{Q}_{hotwat}(1 - \frac{1}{COP_{hotwat}})\right)^2}\right] \tag{9}$$

To have a non-zero diversity, some amount of space cooling is required. This could be balanced by space heating, hot water heating, or a combination of the two. One additional adjustment to the diversity equation is required to account for time-varying loads. We will take an annual average of the hourly diversity, weighted by hourly energy use as

$$div_{annual} = \frac{\sum_{h=1}^{8760} div_h |\dot{Q}_{tot,h}|}{\sum_{h=1}^{n} |\dot{Q}_{tot,h}|} \tag{10}$$

where h is the current hour, 8760 is the total number of hours in a year, and $|\dot{Q}_{tot,h}|$ is the sum of the magnitude of all heating, cooling, and hot water loads for a given hour. A positive sign is used for the heating, cooling , and hot water loads when combining them into $\dot{Q}_{tot}$ so that an hour with more overall heat transfer needed in any direction results in a larger weight to that hour's diversity. This will give a decent sense of overall performance and not overly value hours with very small loads that are well-matched.

If we can estimate the building heat pump COPs, we can then estimate the diversity profiles of networks of one or more buildings. We will continue assuming that space cooling is provided at 18℃ and space heating at 30℃. As an average of the two disjointed district temperature ranges we saw in Sec. 3, we will assume a district operating between 16℃ on the hot side and 12℃ on the cold side. These assumptions allow for calculating diversity estimates without running a Modelica simulation. This is quite useful for a first-pass identification of promising building clusters. For any specific real project, more accurate estimates of load profiles, system temperatures, and equipment COPs could be used.

The diversity calculation can be broken down into the following steps:

1. Calculate equipment COPs. As a first estimate, here we use constant heating and cooling supply temperatures and constant network temperatures, but a more accurate analysis could be done.
2. For each desired combination of building types in a given city, calculate the combined hourly heating, cooling, and domestic hot water load profiles. For example, if Building 1 required 50 W of heating and Building 2 required 10 W of heating, the combined heating profile at that hour would read 60 W of heating.
3. Use the combined load profile, along with the static COPs, to calculate the diversity of each desired building cluster each hour of the Typical Meterological Year using Eqn. 9.
4. Use Eqn. 10 to calculate an annual diversity from the hourly diversities.

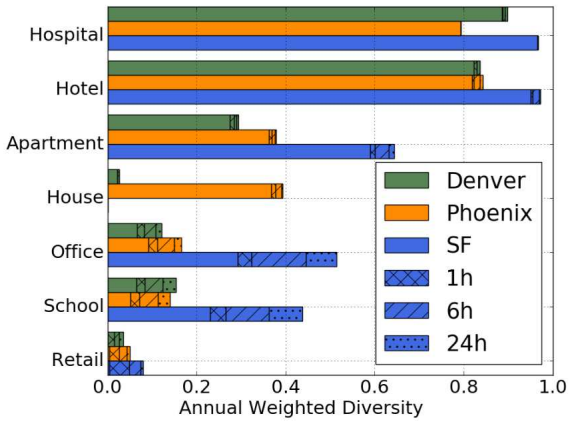

Figure 10: Annual average of hourly diversity for different standardized building models.

4.3 Results

Figure 10 shows the hourly diversity of each building type in the three cities, averaged over a year. Unsurprisingly, hospitals and hotels in both locations have high internal diversity. These buildings would not only be useful anchors on a district system, but could also host their own internal bidirectional water networks that serve their chillers and heat pumps. Based on Fig. 6 such systems could save these buildings 50-66% electricity compared to individual heat pumps and chillers.

Other buildings are both too small to anchor a district and insufficiently diverse. A single-family house in San Francisco is modeled as having no mechanical cooling and therefore has a diversity of zero.[7] In a Phoenix house, a significant fraction of the year requires cooling, which is accompanied by domestic hot water heating. While there is zero diversity in the winter when the building requires space heating, on average there is still a 40% diversity in simultaneous loads.

Residences and other low-medium diversity buildings could potentially complement each other on a district, leading to an overall greater diversity. Figure 11 shows diversity contours for simulated combinations of the reference buildings by relative floor area in each city and assuming six hours of storage. Note: the graphics do not have a uniform scale. These combinations can be characterized as one of three types. The first row of plots are all characterized by buildings that reduce their diversity in aggregate. Adding mid-sized offices or supermarkets to a network with Denver apartments only reduces the baseline efficiency of the apartment building. Similarly single-family homes in Phoenix are not well-complemented by supermarkets or retail. The second row of plots show systems that are dominated by a single building, typically a hotel or hospital. Adding other buildings negligibly changes the already very high diversity. While not quite as dominant as the hospital or hotel, medium offices in San Francisco could also serve as reasonable anchors in this category. These anchors provide a potential financial opportunity for other building owners to pay a fee to join the network that is less than the energy costs they save in the process. For these reasons, "dominated diversity" cases are among the most common in urban environments. Where the first row of plots in Fig. 11 show cases that clearly don't benefit from a district, and the second row shows cases that probably do, the third row shows the marginal cases. Combinations of low-diversity buildings can result in slightly higher aggregate diversity, although none were found that surpassed the diversity threshold for most-likely district efficiency improvement. However, some may still have efficiency gains over individual building systems if restricted to sufficiently dense, low mechanical loss regions. And of course, many district systems are built not specifically for efficiency, but because of community resiliency or other opportunities. The building clusters in the "cooperative diversity" category may be candidates for district networks that are not entirely justified on significant efficiency gains, but are improved enough that with other benefits, they become viable. For completeness, this category also includes an example of a high-diversity individual building (here a hospital) that shows marginal improvement through addition of some supermarket space.

[7]The mid-rise apartment and secondary school models do include mechanical cooling in San Francisco.

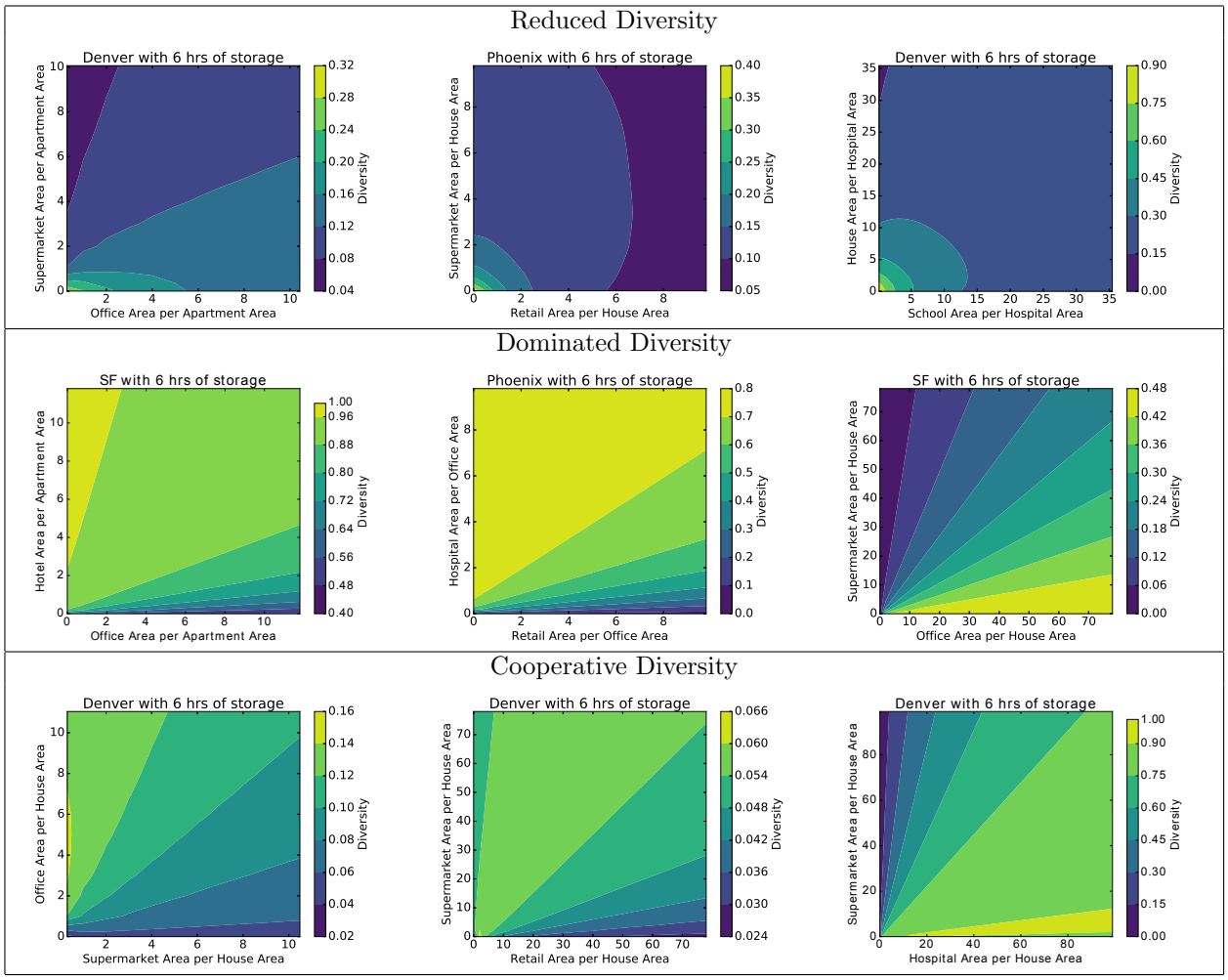

Figure 11: Different building cluster categories.

5 Conclusions

We have developed and demonstrated a method to evaluate the performance of an ambient, bidirectional thermal network, which uses a single circuit for both district heating and cooling. In one element of our work we analyzed the thermodynamic performance of the individual and network systems to evaluate exergy distributions. We compare low- and high-density networks, showing for example, the low-density network with only 20% cooling had an exergy distribution value of 0.3 kJ/kJ-load compared to a more favorable value of 0.18 kJ/kJ-load for a high-density network. The high-density district destroys less exergy in pumps than the isolated buildings while the low-density system has higher pumping requirements.

We also found that even a relatively low-density, high-distribution loss network could be more efficient than aggregated individual buildings if on average there is at least 1 unit of cooling energy per 5.7 units of heating energy (or vice versa). Hospitals and hotels, have diversity scores near to or greater than 0.8 for all three climates we modeled. These high scores suggest that these buildings can meet this benchmark on their own and could save energy by implementing an internal bidirectional system that allowed for recuperation of waste heat. These buildings also serve well as anchors for other community buildings, as is often done in more traditional district systems. Unfortunately, few examples were found so far that combine relatively low-diversity buildings to form high-diversity clusters. However, more site-specific knowledge about the district density, anticipated load profiles, and potential for load-shifting through storage or demand response could reveal more opportunities.

The load diversity data we developed are influenced by climate, building type, and combinations of building types. We can look, for example, at that for the case of Denver, with 6 hour of storage, and compare hospital per home area of 0.5 and supermarket per home area of 0.5 These cases result in high load diversity of about 0.75, and suggest a strong opportunity for these advanced district heating and cooling systems.

Additionally, district systems are often justified for their lower cost, centralized maintenance, resiliency, and fuel-flexibility. Bidirectional systems have the added benefit of being modularly extendable to additional building loads or myriad energy resources. These benefits could justify systems that are not obviously large wins on efficiency.

Future work could take many paths. One is to match the load and cluster analyses done here to actual candidate sites in cities and on campuses. This will allow for first estimating the possible magnitude of the opportunity of building out bidirectional systems in real cities. Different analyses will be needed for new growth areas, built areas without underlying distribution infrastructure, and retrofit potential of existing, older district systems, such as steam networks. Even when more conventional district systems are of interest, the bidirectional analysis may serve as a useful benchmark for ultimate utility: if the bidirectional system is not justified thermodynamically, then an older, unidirectional, higher-temperature network certainly won't be either.

Another line of research involves network topology optimization. Much work has been done to show the effectiveness of fractal geometries to efficiently convey items along a transportation network (Bettencourt, 2013; Batty and Longley, 1994; Salat and Bourdic, 2012). Applying this concept to district water could lead to interesting ramifications about layout and retrofit strategies. The topology will also have large ramifications for the hydraulic systems, a research area in its own right, as dynamic pump flows get quite complicated in a bi-directional flow network.

Additionally, there is work to be done in the United States on designing a dynamic thermal energy market in which buildings buy and sell waste heat. This will require creating a tradable commodity of waste heat in terms of some metric. This metric could be the quantity of thermal energy, thermal exergy, or a more abstract value, like a guarantee of temperature compliance. Whatever quantification is chosen will ultimately incentivize people to maximize their utility of that specific metric, and impact the performance of these systems.

Acknowledgments

This work was funded by Lawrence Berkeley National Laboratory through the Laboratory Directed Research and Development (LDRD) Program. This work was also supported by the Assistant Secretary for Energy Efficiency and Renewable Energy, the U.S. Department of Energy under Contract No. DE-AC02-05CH11231.

References

Batty, M. and P. A. Longley (1994). *Fractal cities: a geometry of form and function*. Academic press.

Bettencourt, L. M. A. (2013). The origins of scaling in cities. *Science 340*(6139), 1438–1441.

Bhatt, S. (2015, Nov). Amazon, data center turn hot idea into cool technology. *The Seattle Times*.

Cooper, L. T. and N. B. Rajkovich (2012). An Evaluation of District Energy Systems in North America: Lessons Learned from Four Heating Dominated Cities in the U.S. and Canada. In *ACEEE Summer Study on Energy Efficiency in Buildings*, pp. 60–72.

Crawley, D. B., L. K. Lawrie, F. C. Winkelmann, W. Buhl, Y. Huang, C. O. Pedersen, R. K. Strand, R. J. Liesen, D. E. Fisher, M. J. Witte, and J. Glazer (2001). Energyplus: creating a new-generation building energy simulation program. *Energy and Buildings 33*(4), 319 – 331. Special Issue: BUILDING SIMULATION'99.

Deru, M., K. Field, D. Studer, K. Benne, B. Griffith, P. Torcellini, B. Liu, M. Halverson, D. Winiarski, M. Rosenberg, M. Yazdanian, J. Huang, and D. Crawley (2011, February). U.S. Department of Energy commercial reference building models of the national building stock. Technical report, National Renewable Energy Laboratory.

Lund, H., S. Werner, R. Wiltshire, S. Svendsen, J. E. Thorsen, F. Hvelplund, and B. V. Mathiesen (2014). 4th Generation District Heating (4GDH). *Energy 68*, 1–11.

Mackres, E., K. Johnson, A. Downs, R. Cluett, and K. Schultz (2015, May). The 2015 City Energy Efficiency Scorecard.

Mennel, S., T. Schluck, and N. Vetterli (2016, November). Site visit to hslu and suurstoofi bi-directional network.

National Data Buoy Center (2016). Station aamc1 -9414750 - alameda, ca. Technical report, National Oceanic and Atmospheric Administration.

Nielsen, S. and B. Möller (2013). GIS based analysis of future district heating potential in Denmark. *Energy 57*, 458–468.

Nussbaumer, T., S. Thalmann, A. Jenni, and J. Ködel (2017, September). *Planungshandbuch Fernwärme* (1.1 ed.). Bern, Switzerland: Bundesamt für Energie.

Office of Energy Efficiency & Renewable Energy (2013). Building characteristics for residential hourly load data.

Rezaie, B. and M. A. Rosen (2012). District heating and cooling: Review of technology and potential enhancements. *Applied Energy 93*, 2–10.

Salat, S. and L. Bourdic (2012). *Urban complexity, efficiency and resilience*. INTECH Open Access Publisher.

Salat, S., F. Labbé, C. Nowacki, and G. Walker (2011). *Cities and Forms: on sustainable urbanism*. Hermann Paris, France.

Schluck, T., P. Kräuchi, and M. Sulzer (2015, September). Non-linear thermal networks - how can a meshed network improve energy efficiency? In *Proceedings of International Conference CISBAT*, Lausanne, Switzerland, pp. 779–785.

Schmidt, D. (2014). EBC ANNEX 64 LowEx Communities. Technical report, International Energy Agency.

United Nations (2015). World Urbanization Prospects: The 2014 Revision. Technical report, United Nations, New York.

Weather Underground (2016). Historical weather. https://www.wunderground.com/history/. Accessed: 2016-09-20.

Wetter, M., W. Zuo, T. S. Nouidui, and X. Pang (2014). Modelica buildings library. *Journal of Building Performance Simulation* *7*(4), 253–270.

Wilcox, S. and W. Marion (2008, May). Users Manual for TMY3 Data Sets. Technical report, National Renewable Energy Laboratory, Golden, CO.