INTERIM REPORT OF THE U.S. DEPARTMENT OF ENERGY'S POWER OUTAGE STUDY TEAM

FINDINGS FROM THE SUMMER OF 1999

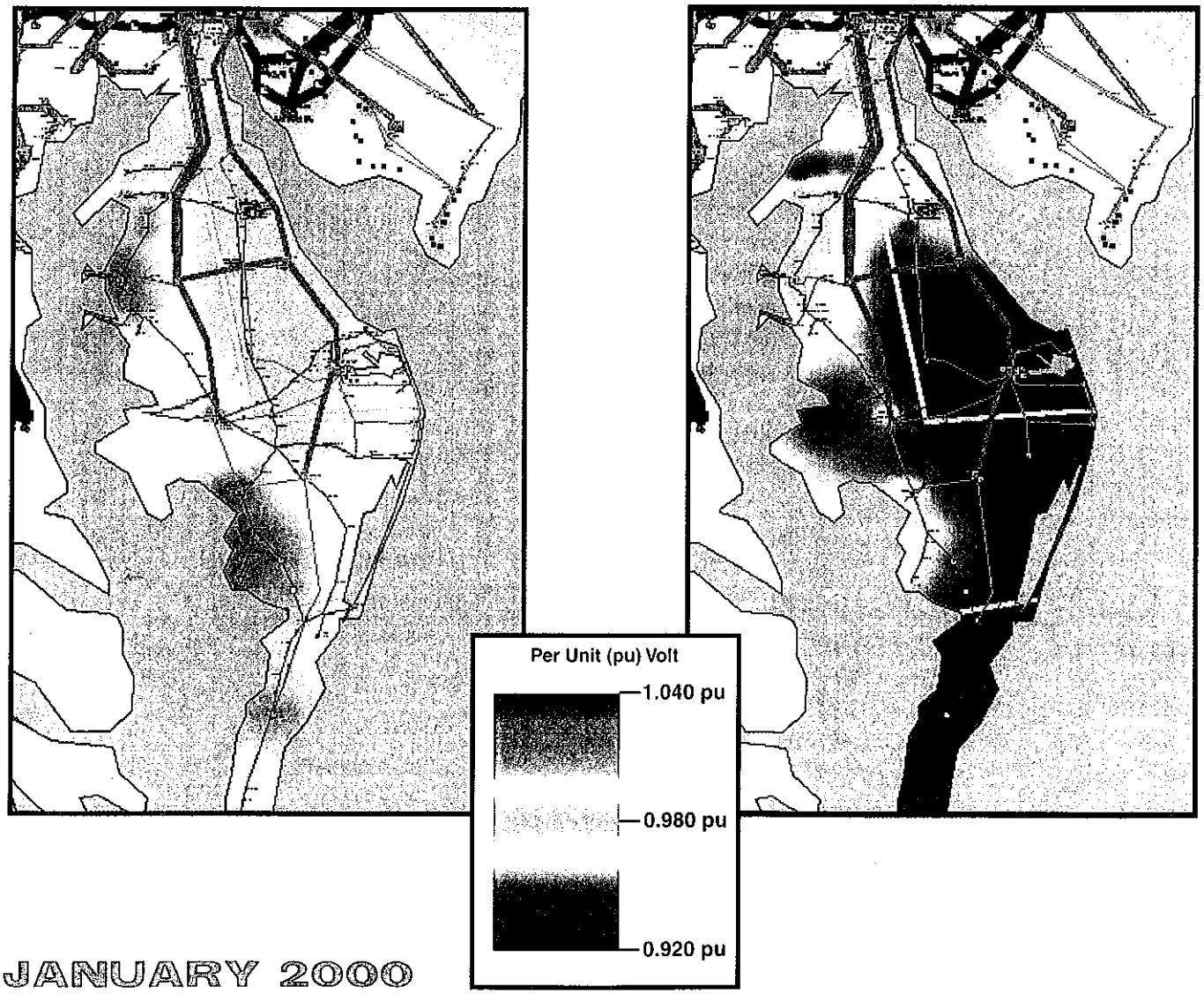

JANUARY 2000

The two maps on the cover depict the 6,000-square-mile Delmarva Peninsula, which includes Delaware, 10 counties in Maryland, and the eastern shore of Virginia. The figure on the left approximates the voltage profile of the transmission system on July 6, 1999, immediately before the outage of the Indian River 2 generator. The figure on the right shows the voltage profile after the outage. Shades of red, yellow, and green indicate typical operating voltages, while shades of blue indicate dangerously low voltages. The figures illustrate that the loss of the relatively small Indian River 2 generator, which was producing just 77 MW at the time it tripped off line, caused low voltages across a wide portion of the peninsula. Such high sensitivity of bus voltages to power generation is often associated with a system operating near its point of maximum loading, when voltages could collapse toward zero, and emergency actions would be needed to avoid catastrophic failure.

INTERIM REPORT OF THE U.S. DEPARTMENT OF ENERGY'S POWER OUTAGE STUDY TEAM

FINDINGS FROM THE SUMMER OF 1999

January 2000

POST Study Participants

U.S. Department of Energy
Power Outage Study Team (POST)
Study Participants

Mr. Paul Carrier, Chairman*
Office of Policy
U.S. Department of Energy

Prof. Fernando Alvarado*
Department of Electrical and Computer Engineering
University of Wisconsin – Madison

Mr. Vikram Budhraja*
Edison Technology Solutions

Mr. Anthony Como*
Office of Fossil Energy
U.S. Department of Energy

Mr. Joseph Eto*
Environmental Energy Technologies Division
E. O. Lawrence Berkeley National Laboratory

Dr. John Hauer*
Energy Technology Division
Pacific Northwest National Laboratory

Mr. John Kueck*
Engineering Technology Division
Oak Ridge National Laboratory

Mr. Philip Overholt*
Office of Energy Efficiency and Renewable Energy
U.S. Department of Energy

Prof. Richard Schuler
Cornell Institute of Public Affairs
Cornell University

Prof. Robert Thomas*
School of Electrical Engineering
Cornell University

Prof. Anjan Bose
College of Engineering and Architecture
Washington State University

Dr. William Buehring*
Decision and Information Sciences Division
Argonne National Laboratory

Prof. Chris DeMarco
Department of Electrical and Computer Engineering
University of Wisconsin – Madison

Ms. Regina Griego*
Office of Environment, Safety, and Health
U.S. Department of Energy

Prof. Ian Hiskens
Department of Electrical and Computer Engineering
University of Illinois at Urbana-Champaign

Prof. Thomas Overbye
Department of Electrical and Computer Engineering
University of Illinois at Urbana-Champaign

Dr. Paula Scalingi*
Office of Critical Infrastructure Protection
U.S. Department of Energy

Dr. Kevin Stamber
Critical Infrastructure Surety Department
Sandia National Laboratories

Mr. F. Craig Zingman*
Office of Emergency Management
U.S. Department of Energy

* POST members

Contents

POST Study Participants iii

Notation vii

Preface ix

Summary S-1

Part 1: Electric Power Disturbances in the Summer of 1999 — Background, Description, and Findings 1-1

1 New England: Generation Deficiency on June 7 and 8 1-3

2 New York City: Outages on July 6 and 7 1-9

3 Long Island: Outages and Depressed Voltages on July 3 through 8 1-15

4 Mid-Atlantic Area: Voltage Declines on July 6 and 19 1-19

5 New Jersey: Outages on July 5 through 8 1-23

6 Delmarva Peninsula: Outages on July 6 1-27

7 South-Central States: Rotating Outages on July 23 1-31

8 Chicago: Outages on July 30 through August 12 1-39

9 Bibliography for Part 1 1-51

Part 2: Stakeholder Workshops — Sessions on POST Findings 2-1

10 San Francisco, California, Workshop 2-3

11 New Orleans, Louisiana, Workshop 2-7

12 Newark, New Jersey, Workshop 2-11

Appendix A: POST Study of Power Flow in the Delmarva Peninsula A-1

Appendix B: Typical Workshop Agenda and Registration Form B-1

Appendix C: Glossary C-1

Figures

1 New York City: Map of Consolidated Edison Electric Distribution Network System 1-10

2 New York City: Consolidated Edison Distribution Network 1-11

3 Long Island: Long Island Power Authority's Hourly Loads in the South Fork Area 1-16

4 Mid-Atlantic Area: PJM Interconnection 500-kV Voltage Profile on July 6, 1999 1-20

5 Mid-Atlantic Area: PJM Interconnection 500-kV Voltage Profile on July 19, 1999 1-21

6 New Jersey: Public Service Electric and Gas Company Interconnections to Bergen Switching Station 1-24

7 Chicago: Map Showing Locations of Commonwealth Edison's Northwest, Lakeview, and Jefferson Substations 1-40

8 Chicago: Customer Outages Associated with Commonwealth Edison's Northwest Substation 1-41

9 Chicago: Event Timeline for Commonwealth Edison's Northwest Substation 1-42

10 Chicago: Event Timeline for Commonwealth Edison's Jefferson Substation 1-44

11 Chicago: Value for the Average of Extreme Weather Used by Commonwealth Edison for Forecasting 1-46

12 Chicago: Annual Substation Maintenance Expenditures for Commonwealth Edison 1-49

A.1 Delmarva Peninsula: Power Voltage Curves for Delmarva Power & Light Company's Lewes Substation 69-kV Voltage before and after the Indian River 2 Generator Outage A-2

Table

S.1 Findings Related to Workshop Topics S-4

Notation

This notation list identifies the abbreviations, acronyms, initialisms, and units of measure used in this report. The glossary (Appendix C) provides definitions of some of the terms listed here as well as many others used throughout the report and some others that are related to the field but not expressly mentioned. In the text of this report, terms that are defined in the glossary appear in italics the first time they are used.

ComEd	Commonwealth Edison Company
Con Ed	Consolidated Edison Company
DAWG	Disturbance Analysis Working Group
DC	direct current
DOE	U.S. Department of Energy
DPL	Delmarva Power & Light Company
ECAR	East Central Area Reliability Coordination Agreement (NERC region)
EMS	energy management system
EPRI	Electric Power Research Institute
FERC	Federal Energy Regulatory Commission
GPU	GPU Energy
IR2	Indian River Unit 2
IR3	Indian River Unit 3
ISO	independent system operator
ISO-NE	ISO-New England
KCPL	Kansas City Power and Light
kV	kilovolt(s)
kVA	kilovolt(s)-ampere
kW	kilowatt(s)
LIPA	Long Island Power Authority
MAAC	Mid-Atlantic Area Council (NERC region)
MAPP	Mid-Continent Area Power Pool (NERC region)
MVA	megavolt(s)-ampere
MVAR	megavolt(s)-ampere-reactive
MW	megawatt(s)
MWh	megawatt-hour(s) of electric energy
NERC	North American Electric Reliability Council
NPCC	Northeast Power Coordinating Council
NYPP	New York Power Pool
OEC	other extreme condition
OP-4	ISO-NE's Operating Procedure No. 4
PECO	PECO Energy Company
PJM	PJM Interconnection, LLC (formerly Pennsylvania, New Jersey, Maryland Interconnection)

POST	Power Outage Study Team
PSE&G	Public Service Electric and Gas Company
PV	power voltage
SCADA	supervisory control and data acquisition
SERC	Southeastern Electric Reliability Council (NERC region)
SPP	Southwest Power Pool (NERC region)
TLR	transmission loading relief
TVA	Tennessee Valley Authority
T&D	transmission and distribution
V	volt(s)
WR	Western Resources
XLPE	cross-linked polyethylene
YTD	year to date

Preface

POST Objectives and Approach

The U.S. Department of Energy (DOE) Power Outage Study Team (POST) was formed in August 1999 by Secretary of Energy Bill Richardson to (1) study significant electric power outages and other disturbances that occurred during the summer of 1999 and (2) recommend appropriate federal actions to avoid electric power disturbances in the future. The team consists of power system experts from DOE, DOE's research laboratories, and academia.

The POST has undertaken a three-phase approach to accomplish its task. Phase 1, which culminated in the issuance of this Interim Report, was to gather facts and evidence on the electric power disturbances of last summer and publish the findings developed from this effort. Phase 2 will consist of three workshops to solicit recommendations from electric industry stakeholders on possible approaches to address the issues raised by the POST's findings. Phase 3 will be the preparation of the final report containing the POST's recommendations to the Secretary of Energy.

Interim Report

For the Interim Report, the POST studied electric power outages that occurred in six places: New York City, Long Island, New Jersey, the Delmarva (Delaware-Maryland-Virginia) Peninsula, the South-Central States, and Chicago. In addition, it studied significant electric power disturbances that occurred in New England and the mid-Atlantic area. Team members met with relevant utilities, independent system operators, and regulators and obtained information from them. The POST developed 38 findings on the basis of its studies, which are discussed in the report. Copies of the report are available from the:

- DOE Public Reading Room, (202) 586-3142, and
- POST Web site at http://tis.eh.doe.gov/post/.

Stakeholder Workshops

To facilitate discussions at the stakeholder workshops, the POST grouped its findings into five topical areas. Although stakeholders will have the opportunity to address all five topics at each workshop session, each session focuses on one primary topic. The workshop times, locations, and primary topics follow here:

- January 20, 2000
  San Francisco, California
  - Topic 1: Transition to Competitive Energy Service Markets (morning session)
  - Topic 2: Regulatory Policy for Reliable Transmission and Distribution (afternoon session)

- January 25, 2000
  New Orleans, Louisiana
  - Topic 3: Information Resources (morning session)
  - Topic 4: Operations Management and Emergency Response (afternoon session)

- January 27, 2000
  Newark, New Jersey
  - Topic 5: Reliability Metrics, Planning, and Tracking

Stakeholders are invited to register to participate in one or more of the workshop sessions. A registration form is included in Appendix B of this report and is also available at the POST Web site. All registrants will have the opportunity to recommend ways to address the POST findings and to participate in discussions. Unregistered participants will also have the opportunity to make recommendations at the workshops. A transcript of each workshop will be made available to interested parties. Recommendations and comments will also be accepted through January 31, 2000, either via the POST Web site or by mailing them to Paul Carrier, PO-21, U.S. Department of Energy, 1000 Independence Avenue, SW, Washington, D.C., 20585.

Acknowledgments

The organization of POST was coordinated with the Consortium for Electric Reliability Technology Solutions, which includes representatives from DOE national laboratories, industry, and academia. It was formed to conduct research to maintain and enhance the reliability of the electric power system under the emerging competitive market structure.

In addition to thanking those mentioned at the front of this report for their countless hours investigating the major power outages and other disturbances of last summer, I would also like to thank the following: Richard Glick and Howard Gruenspecht for their guidance and for providing DOE support; Goray Mookerjee, Jim Dyer, and Dan Gorski for their technical assistance in the preparation and review of this Interim Report; Marita Moniger, Margaret Clemmons, and Ron Whitfield for their assistance in editing and preparing this report; and Kathleen Schmidt for organizing the Stakeholder Workshops.

Paul Carrier
Chairman, Power Outage Study Team

Summary

The electric power industry is in the midst of evolutionary change. The reliability events during the summer of 1999 (i.e., outages in New York City, Long Island, New Jersey, the Delmarva [Delaware-Maryland-Virginia] Peninsula, the South-Central States, and Chicago and nonoutage power disturbances in New England and the Mid-Atlantic area) demonstrate that the necessary operating practices, regulatory policies, and technological tools for dealing with the changes are not yet in place to assure an acceptable level of reliability. In a restructured environment, generation technologies and prices are a matter of private choice, yet the reliability of the delivery system benefits everyone. The operation of the electric system is more difficult to coordinate in a competitive environment, where a much larger number of parties are participating.

In April 1996, Federal Energy Regulatory Commission (FERC) Orders 888 and 889 constituted a major step in the restructuring of the electric power industry. By November 1, 1999, 24 states had either enacted restructuring legislation or issued comprehensive regulatory orders on restructuring.[1] Most of the remaining states are considering restructuring initiatives. This change is driven by the desire to save the consumer money, which would result from the greater efficiency induced by competition.

Unfortunately, the development of reliability management reforms, tools, technologies, and operating procedures has lagged behind economic reforms in the electric industry. This lag has been particularly troublesome during this transition period, while new market participants and system operators are learning to work together. In anticipation of competitive markets, some utilities have adopted a strategy of cost cutting that involves reduced spending on reliability. In addition, responsibility for reliability management has been disaggregated to multiple institutions, with utilities, independent system operators, independent power producers, customers, and markets all playing a role. The overall effect has been that the infrastructure for reliability assurance has been considerably eroded.

Moreover, historical levels of electric reliability may not be adequate for the future. The quality of electric power and the assurance that it will always be available are increasingly important in a society that is ever more dependent on electricity. Indeed, our health, safety, and economic strength all depend on a reliable supply of electricity.

Power outages are not unique to the summer of 1999. Although electric reliability in the United States has historically been as good as or better than it is anywhere else in the world, sections of the country experienced some serious outages in the past and will

[1] According to the U.S. Department of Energy, Energy Information Administration.

continue to experience them in the future. A significant increase in electricity use and new demands on system operators, especially during times of peak demand, are stressing the electric system. Given the complexity of an electric system capable of supplying power to more than 260 million people in the world's strongest economy, it is not technically possible or economically advisable to seek perfect reliability. However, POST members believe that there is significant room for improvement, and that the new reliability challenges brought on by industry restructuring itself need to be addressed.

The POST investigation of the summer of 1999 power disturbances revealed that some were very similar to events that had occurred in the past. Thus, many of the team's findings are similar to those from investigations of past outages. For example, the unforeseen and dramatic voltage declines experienced in the mid-Atlantic area on July 6 and 19, caused in part by the movement of large amounts of power through the area, were very similar to the problems that occurred in the Northeast in the winter of 1994 and in the Northeast in July and August of 1996. The problem is not that we have not learned from past outages. Rather, it is that in many instances, we have not taken the necessary steps to design and implement the solutions.

The POST findings, drawn from the facts and evidence gathered during the team's investigation of last summer's major power outages and nonoutage power disturbances, are grouped into the following five topical areas:

1. **Transition to Competitive Energy Service Markets.** While energy markets have developed to the point where suppliers can respond to market signals, the same cannot be said for customers. Customers see only the average cost of electricity and therefore lack the incentive to reduce their use of power during times of shortages or to install on-site generation. This lack of demand elasticity results in emergency calls for public conservation and, in extreme cases, inadequate supplies to serve loads. A second point is the fact that market rules are still evolving, and market participants do not have a lot of experience in dealing with system emergencies. This may hinder the ability of system operators to respond to emergencies.

2. **Regulatory Policy for Reliable Transmission and Distribution.** The POST investigations found that the aging infrastructure and increased demand for power have strained many transmission and distribution systems to the point of interrupting service. In many cases, state and federal regulatory policies are not providing adequate incentives for utilities to maintain and upgrade facilities to provide an acceptable level of reliability.

3. **Information Resources.** System operators and engineering staff need accurate and timely information in order to make proper planning decisions, react to system emergencies, and conduct event analyses. The POST found that in many cases, load forecasting techniques were inadequate and information on equipment status and condition was unavailable. In addition, data need to be assimilated and integrated into the decision process. The necessary tools for

collecting and integrating real-time information need to be funded, developed, tested, and implemented to aid operations in the competitive market.

4. **Operations Management and Emergency Response.** As restructuring of the electric industry proceeds, system operations have become much more complex. In this new environment, system operators need improved tools and flexibility to anticipate events and prevent small emergencies from becoming bigger ones. The POST found that contracts, maintenance schedules, and equipment/system design sometimes limited an operator's flexibility to respond to an emergency. In some cases, clear and properly designed protocols for notifying officials during emergencies were not available.

5. **Reliability Metrics, Planning, and Tracking.** Electric reliability is not just a measure of the number of customers that experience an outage. It includes the ability of a system to avert or recover from an outage. The level of reliability clearly depends on the redundancy of the system and the availability of generation reserves. These resources exist at a sufficient level when there is good long-term planning. The POST found that responsibility for comprehensive planning has become blurred during the electric power industry's transition, and, consequently, planning has been inadequate.

Table S.1 is a matrix summarizing the specific findings of the POST. The matrix categorizes the POST findings in one or two of the five topical areas that will be the subject of stakeholder workshops. These workshops will help the POST develop its recommendations to the Secretary of Energy.

Table S.1 Findings Related to Workshop Topics

Reliability Events and Findings	Workshop Location and Primary Topic Being Discussed				
	San Francisco		New Orleans		Newark
	Topic 1: Transition to Competitive Energy Service Markets	Topic 2: Regulatory Policy for Reliable Transmission and Distribution	Topic 3: Information Resources	Topic 4: Operations Management and Emergency Response	Topic 5: Reliability Metrics, Planning, and Tracking
New England: Generation Deficiency on June 7 and 8					
1. Electricity suppliers respond to market signals, but there is a lag of several years before new generation resources can be placed into service.	✔				
2. Retail customers have limited mechanisms and incentives to conserve energy or resort to alternatives during electricity shortages. (Same as a Delmarva finding)	✔				
3. Market rules for system operation during times of system emergencies have not been fully developed or agreed upon by market participants.	✔				
4. Some independent system operators were lacking the needed authority to arrange energy transfers during emergency conditions.	✔				
New York City: Outages on July 6 and 7					
5. Cable condition is not accurately assessed by conventional diagnostics and practices, which may accelerate cable failure.			✔		✔
6. Real-time data on cable temperature are not available.			✔		
7. The harsh environment in which cables are located contributes to reliability problems.					✔

Table S.1 (Cont.)

Reliability Events and Findings	Workshop Location and Primary Topic Being Discussed				
	San Francisco		New Orleans		Newark
	Topic 1: Transition to Competitive Energy Service Markets	Topic 2: Regulatory Policy for Reliable Transmission and Distribution	Topic 3: Information Resources	Topic 4: Operations Management and Emergency Response	Topic 5: Reliability Metrics, Planning, and Tracking
Long Island: Outages and Depressed Voltages on July 3 through 8					
8. Load predictions have been inadequate.			✔		✔
9. Transformer failure and associated interconnection problems can require lengthy equipment repair times.					✔
10. Traditional methods (e.g., construction of new transmission and central generation) for supplying electric power to load pockets were not able to keep up with load growth.		✔			
Mid-Atlantic Area: Voltage Declines on July 6 and 19					
11. Unit ratings were not consistent with operating performance during periods of high loads.			✔		✔
12. There may not be adequate incentives for reactive power production.	✔	✔			
13. Planning tools did not predict significant voltage degradation during periods of high loads.			✔	✔	
New Jersey: Outages on July 5 through 8					
14. There are no reliable tests for identifying incipient failures in feeder cables.			✔		✔
15. Mechanisms for sharing information on maintenance best practices and equipment performance among distribution utilities were inadequate.		✔			✔
16. Utilities may experience lengthy delays in replacing failed critical equipment.		✔			✔

Table S.1 (Cont.)

Reliability Events and Findings	Workshop Location and Primary Topic Being Discussed				
	San Francisco		New Orleans		Newark
	Topic 1: Transition to Competitive Energy Service Markets	Topic 2: Regulatory Policy for Reliable Transmission and Distribution	Topic 3: Information Resources	Topic 4: Operations Management and Emergency Response	Topic 5: Reliability Metrics, Planning, and Tracking
Delmarva Peninsula: Outages on July 6					
17. Forecasting methods used by system planners did not accurately predict peak summer loads.					✔
18. Summer ratings for electric generating units were calculated for normal summer temperatures and were not consistent with performance during periods of unusually high temperatures.				✔	
19. Retail customers have limited mechanisms and incentives to conserve energy or resort to alternatives during electricity shortages. (Same as a New England finding)	✔				
20. Notice requirements in load management contracts do not permit an efficient response to emergencies.	✔			✔	
21. Reliability criteria for generation reserves were not sufficient to avoid regular power shortfalls.					✔
South-Central States: Rotating Outages on July 23					
22. Summer ratings and actual capability of generating units are not always consistent.			✔		✔
23. Problems in anticipation and delays in the application of public appeals limited the effectiveness of the appeals once they were made.				✔	
24. Reliance on nonfirm purchases to meet operating reserve targets results in inadequate reserves during regionwide events of high demand.				✔	✔
25. Mechanisms for short-term power sales rely on multiple, often manual telecommunications, leading to inefficient and untimely outcomes.	✔				

Table S.1 (Cont.)

Reliability Events and Findings	Workshop Location and Primary Topic Being Discussed				
	San Francisco		New Orleans		Newark
	Topic 1: Transition to Competitive Energy Service Markets	Topic 2: Regulatory Policy for Reliable Transmission and Distribution	Topic 3: Information Resources	Topic 4: Operations Management and Emergency Response	Topic 5: Reliability Metrics, Planning, and Tracking
26. The generation infrastructure is aging.	✔				
27. Dispatch software problems led to inefficient utilization of limited energy resources.			✔	✔	
Chicago: Outages on July 30 through August 12					
28. Load forecasting techniques and associated distribution planning tools failed to adequately accommodate the effects of unusual summer weather conditions experienced in 1999.					✔
29. Emergency preparedness and management plans did not address distribution problems.				✔	✔
30. The distribution system topology is inflexible.					✔
31. Substation protection and equipment configuration practices limited flexibility.				✔	
32. Planned distribution system upgrades were not implemented on schedule.		✔			✔
33. Real-time information and historical records on distribution system conditions were limited and were not always preserved.			✔		
34. Maintenance planning did not consider transformer overload analysis.				✔	
35. Substation maintenance programs did not anticipate component weaknesses.		✔			✔
36. Maintenance management contributed to the severity of the outages.		✔			✔
37. Transmission and distribution maintenance expenditures declined over time and became inadequate.	✔	✔			
38. Several business factors compromised reliability performance.	✔	✔			

Part 1: Electric Power Disturbances in the Summer of 1999 — Background, Description, and Findings

Part 1 of this Interim Report presents the results of the U.S. Department of Energy (DOE) Power Outage Study Team (POST) investigation of eight major reliability events in the summer of 1999. The reliability events were outages in New York City, Long Island, New Jersey, the Delmarva (Delaware-Maryland-Virginia) Peninsula, the South-Central States, and Chicago and nonoutage power disturbances in New England and the Mid-Atlantic area. For each reliability event, background information is provided first, and a description of the sequence of events and responses follows. Then the team's findings (i.e., observations about the event) are listed. Each finding is categorized in one or two topical areas (shown in parentheses after the finding). There are five topical areas in all, and each one is the primary focus of a Stakeholder Workshop session (as discussed in Part 2). Results from the workshop sessions will be used by POST in developing its recommendations to the Secretary of Energy.

Section 1
New England: Generation Deficiency on June 7 and 8

1.1 Background

ISO-New England (ISO-NE) is the nonprofit *independent system operator* (ISO) responsible for operating New England's *bulk power system* and for administering the region's restructured *wholesale electricity market.*[1] ISO-NE operates six hourly markets: (1) energy, (2) 10-minute *spinning reserve,* (3) *automatic generation control* (AGC), (4) 10-minute *nonspinning reserve*, (5) 30-minute *operating reserve*, and (6) *operable capability.* It also operates a monthly market for *installed capability.* ISO-NE began operations on July 1, 1997, when it assumed responsibility for staff and equipment from the New England *Power Pool* control center.

The New England *electric system* consists of thousands of miles of *transmission* lines and several hundred generating facilities. Of these, 330 plants are under direct ISO-NE control through four subregional, satellite control centers. The New England electric system encompasses Connecticut, Maine, Massachusetts, New Hampshire, Rhode Island, and Vermont. ISO-NE has *interconnections* with the bulk power systems in New York, Quebec, and New Brunswick. ISO-NE is a member of the Northeast Power Coordinating Council (NPCC) and coordinates many of its operating activities through that body.[2]

1.2 Event Description

The New England *grid* is a summer peaking system. Normal summer day *peak demands* range from 18,000 to 20,000 megawatts (MW). Before the summer of 1999, the highest peak load of all time, 21,406 MW, was set on July 22, 1998. This was superseded by a new peak of 22,523 on July 6, 1999. Peak demands on June 7 and 8 were close to the 1998 record, at 20,900 MW and 20,800 MW, respectively.

During the first week of June, *generating units* with a total capacity of 3,500 MW were out of service for scheduled maintenance and refueling. This figure is consistent with historic levels for the first week of June. In addition, as the week progressed, about 3,000 MW of capacity was on *forced outage*, an amount that was about 600 MW higher than average for that time of the year.

---

[1] From this point on in this report, terms that are defined in the glossary are in italics the first time they appear in the text.

[2] NPCC reports are a particularly good source of information about the broader conditions and activities associated with the June reliability events.

On June 7 and 8, 1999, record-setting heat and humidity spread across the northeastern United States plus much of central and eastern Canada. New England had experienced such conditions in early June only one other time in the last 40 years. All five control areas in the NPCC experienced actual *loads* that were substantially above those predicted by the *North American Electric Reliability Council* (NERC) in its 1999 summer assessment. With the exception of the Maritime Provinces in Canada, the actual loads also exceeded the weekly forecasts conducted the week before June 7 and 8. Compounding the problem, actual generating unit unavailability in New England and Ontario on these days also exceeded the weekly forecasts. As a result of these conditions, the New England, Ontario, and New York regions experienced shortages in reserve electrical capacity and consequent operating emergencies.

On Sunday, June 6, ISO-NE projected a load for Monday, June 7, that called for several of the 15 actions required by its Operating Procedure No. 4 (OP-4).[3] By early Monday morning, it was evident that weather conditions were going to be more severe than forecast, and ISO-NE projected a peak demand that would be more typical for July and August. By 9:30 a.m. Monday, it became evident that normal operating reserves would fall below prescribed levels.

By 10:00 a.m. Monday, June 7, ISO-NE began implementing OP-4 actions. At 10:15 a.m., it issued a "power watch advisory" to the media, government officials, and other key constituencies. Over the course of that day, ISO-NE implemented all 15 actions of OP-4. These included two levels of public appeals to curtail power consumption and a 5% systemwide voltage reduction. The actions also included importing 300 MW of emergency power from the New York Power Pool (NYPP) and 500 MW from PJM Interconnection, LLC (transferred through the NYPP grid).

Monday's forecast for Tuesday, June 8, projected an even higher peak demand of 21,400 MW — essentially equal to the all-time peak demand. On Monday night, ISO-NE directed that the upper ponds of the region's two large pumped storage facilities be filled and that other actions be taken to maximize the availability of resources for Tuesday. Turbine vibration problems occurred at the Seabrook Nuclear Power Station early on Tuesday morning, suggesting that the plant might have to cease operations.

By early Tuesday morning, the peak load projection was increased to 21,975 MW. By 9:00 a.m., ISO-NE had implemented all but one action of OP-4, that of *voltage* reduction. This was reserved for use later in the day or in response to a system *contingency*. In addition, ISO-NE began preparations for implementing OP-7, *load shedding*. This action had never before been implemented on a systemwide basis in New England. As part of the second-level public appeal in OP-4, at 9:00 a.m., ISO-NE requested assistance from the governors of the six New England states. Massachusetts,

[3] OP-4, "Action during a Capacity Deficiency" can be found on the Web at http://www.iso-ne.com/operating_procedures/documents. The potential load relief from implementing all 15 actions of OP-4 is about 3,500 MW.

Connecticut, and Rhode Island immediately took steps to shut down noncritical facilities. The other three states (Maine, New Hampshire, and Vermont) opted to not take this action, since air conditioning loads there were modest, and relief to the system would have been minimal.

Around 10:00 a.m. on June 8, ISO-NE managed to secure some emergency power from NYPP (the amount was reduced four hours later to meet needs in New York). Working through the NPCC, ISO-NE found that the closest available source of additional emergency power was Michigan. The heat wave was affecting the entire northeast portion of the country. After some negotiations and some readjustments to the intervening networks, ISO-NE imported 400 MW of emergency power along a path from Michigan through Ontario and New York to New England.

Between the hours of 1:00 and 2:00 p.m., the ISO-NE load stabilized as conservation measures took effect. Load remained essentially flat at 20,800 MW for the remainder of the afternoon. ISO-NE lifted all OP-4 actions by 8:00 p.m. Tuesday evening.

During the course of this two-day event, ISO-NE received critically important assistance from PJM, New York, Michigan, Ontario, Quebec, and the Maritime Provinces of Canada. Some of these systems encountered their own emergencies during the event and were not able to export energy throughout the period. However, even the systems most affected (New York and Ontario) were able to reconfigure their operation to support transfers of emergency power into New England from more distant sources. However, several reports indicate that new market rules have made this process inordinately complex and time consuming.

As a result of this reliability event, ISO-NE is considering and implementing a number of initiatives, including these:

- Implementing a curtailable load program. This program pays large customers (i.e., customers that use a relatively large amount of electricity) that can readily curtail their use of electric power and that are not already on *interruptible rates*. This program differs from traditional interruptible rate *tariffs* in two ways: (1) the contractual arrangement would be between ISO-NE and the customer and (2) the customer is paid $8 for each kilowatt (kW) that is curtailed for the duration of the event. (This amount is pro-rated for *curtailments* that last for less than the duration of the event.)

- Revising the annual maintenance schedule to extend the summer peak load exposure period to include June.

- Enhancing the emergency communications plan.

- Implementing electronic *dispatch* instructions and improving the audit trail of dispatch instructions.

- Establishing a procedure for setting and publishing forecast *clearing prices* when electricity supplies are scarce.

- Reaching agreement with owners of pumped storage facilities on policies for managing pumping loads during emergencies.

- Acquiring short-term load forecasting tools, improving coordination between on-shift scheduling and unit commitment tools, and improving how price-related information is presented to market participants to help them understand consequences of dispatch decisions.

- Accepting *short-notice transactions* and ignoring the normal requirement that accepting these transactions requires additional reserves during OP-4 conditions (which is when the reserve requirement is not being met already).

- Negotiating new interconnection arrangements that address logistical issues arising from the new market structures of potential suppliers.

- Implementing processes that ensure that all dispatchable loads are dispatched when the economic clearing price rises above their bid price.

Overall, the grid operations system and the market responded to the emergency quite well. Had this not been so, the emergency could have been devastating to highly populated regions of the United States and Canada. That this did not happen is a result of exemplary coordination among NPCC and the member control areas, within the framework of a relatively young market that is still adapting to new rules and expectations. The information from this experience should be valuable to regions of North America in which competition and restructuring are less advanced.

1.3 POST Findings

1. **Electricity suppliers respond to market signals, but there is a lag of several years before new generation resources can be placed into service. (Transition to Competitive Energy Service Markets)** – Most of the states in New England have implemented some form of competition for the provision of energy services. High electricity prices and several summers of low *generation reserves* as a result of the early retirement of several nuclear power plants have led generation companies to propose adding more than 30,000 MW of new capacity. This amount represents more than the total existing capacity in the area. Although much of this new capacity will never be built, many are predicting a generation surplus in New England within a few years. Such predictions clearly indicate that this aspect of the generation market is working in New England. However, it does take time to build new generation facilities, and there has historically been a lag between the time when generation is needed and when it becomes available.

2. **Retail customers have limited mechanisms and incentives to conserve energy or resort to alternatives during electricity shortages. (Transition to Competitive Energy Service Markets)** – ISO-NE had to resort to public appeals for conservation, including the step of asking the New England governors to close nonessential facilities.

3. **Market rules for system operation during times of system emergencies have not been fully developed or agreed upon by market participants. (Transition to Competitive Energy Service Markets)** – The reliability event of June 7 and 8 uncovered many market flaws, including the inability to (1) forecast market clearing prices when supplies are scarce and (2) manage pump storage and *must-run resources* that are above the energy clearing price.

4. **Some independent system operators were lacking the needed authority to arrange energy transfers during emergency conditions. (Transition to Competitive Energy Service Markets)** – Some of the ISOs involved in the June 8 delivery of emergency power from Michigan to New England did not have well-defined emergency procedures to conduct the transactions.

Section 2
New York City: Outages on July 6 and 7

2.1 Background

Consolidated Edison Company (Con Ed) is a member of the NYPP and the NPCC. Con Ed serves the most dense electrical *load pocket* in the world. It has more than 3.1 million customers in an area of 604 square miles served by more than 90,000 miles of underground distribution cable and 255,000 manholes and service boxes. Con Ed uses a *distribution network* concept. The networks are low-voltage grids supplied by 13.8-kilovolt (kV) feeders that cover anywhere from several city blocks to several square miles. The networks are mostly underground, beneath the streets and sidewalks. The Con Ed system includes about 25 distribution networks within the city limits. Each network is independent from its neighboring networks and is fed from multiple distribution feeders. Con Ed has 50% of all the distribution networks in the world, and its engineers are experts who often act as consultants for other distribution networks. Figure 1 is a map of the Con Ed network system.

The basic design of the network system provides for overall high reliability. However, when large numbers of feeders fail simultaneously, an entire network might have to be de-energized. The low-voltage distribution network consists of an underground grid of interconnected low-voltage conductors – essentially a mesh of interconnected wires (Figure 2). The low-voltage conductors are protected by *current limiters.*

The residential networks (like Washington Heights) are much less dense than the business area networks. Each network is a single, indivisible element fed by perhaps 10 to 24 13.8-kV feeder cables that power underground 13-kV/120/208-volt (V) transformers. The feeders are insulated mostly with cross-linked polyethylene (XLPE) and have multiple connections and splices. Individual feeders may be several miles long. The transformers and feeders are distributed throughout the network to maximize redundancy. The networks are conservatively designed so that they can still carry the load and be kept energized even if two or three feeders (depending on load) are lost. As more feeders are lost, the remaining feeders, associated transformers, and network conductors are subjected to higher and higher loadings. These higher loadings then cause the operation of additional devices to protect the remaining equipment and cable insulation from damage caused by overloading and high equipment temperatures.

When sustained high air temperatures occur, the increased ground temperature reduces the heat transfer from the underground cables. At the same time, the electrical load increases as consumers turn on their air conditioners. This situation increases the temperature of the cables.

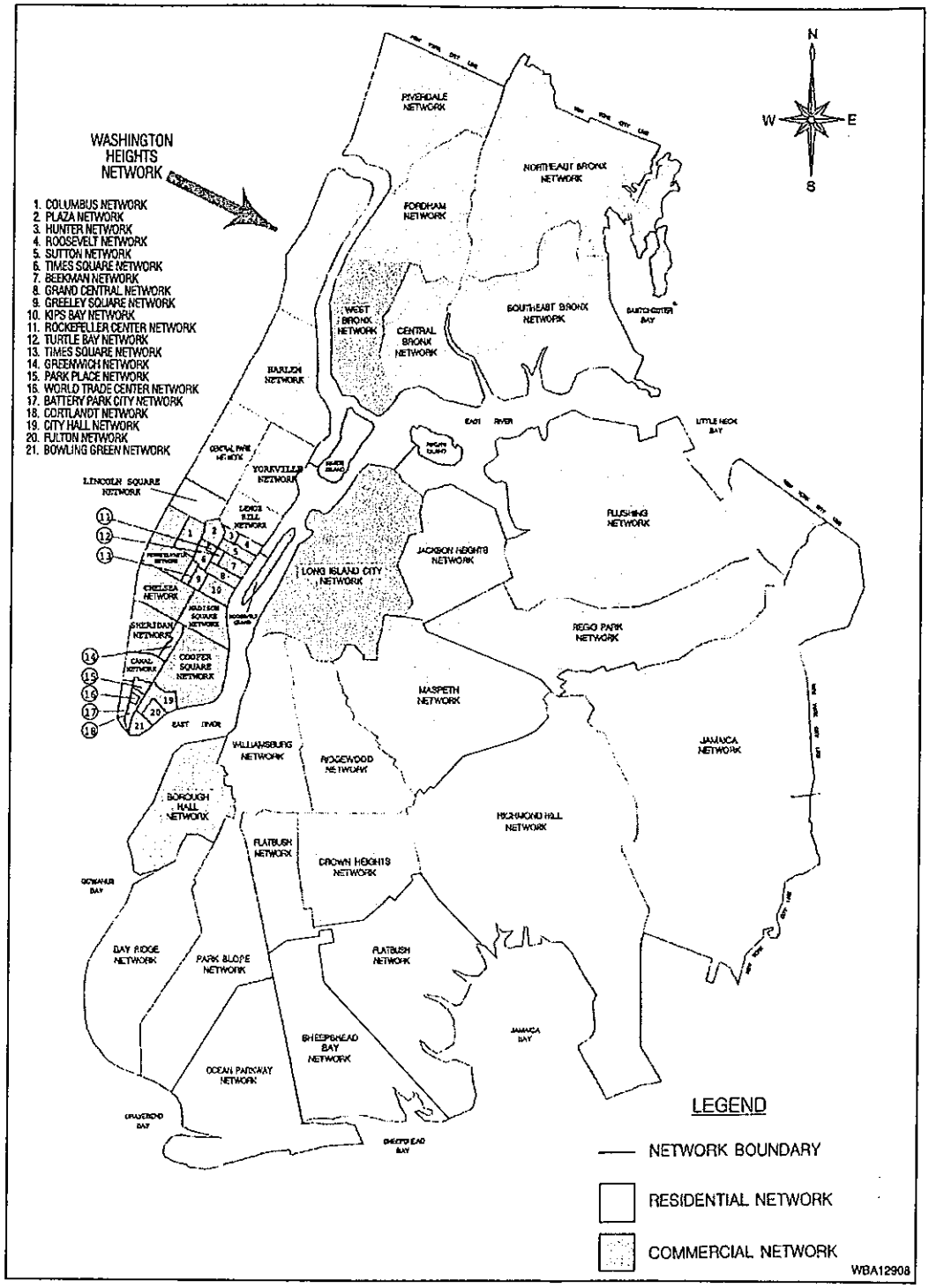

Figure 1 New York City: Map of Consolidated Edison Electric Distribution Network System

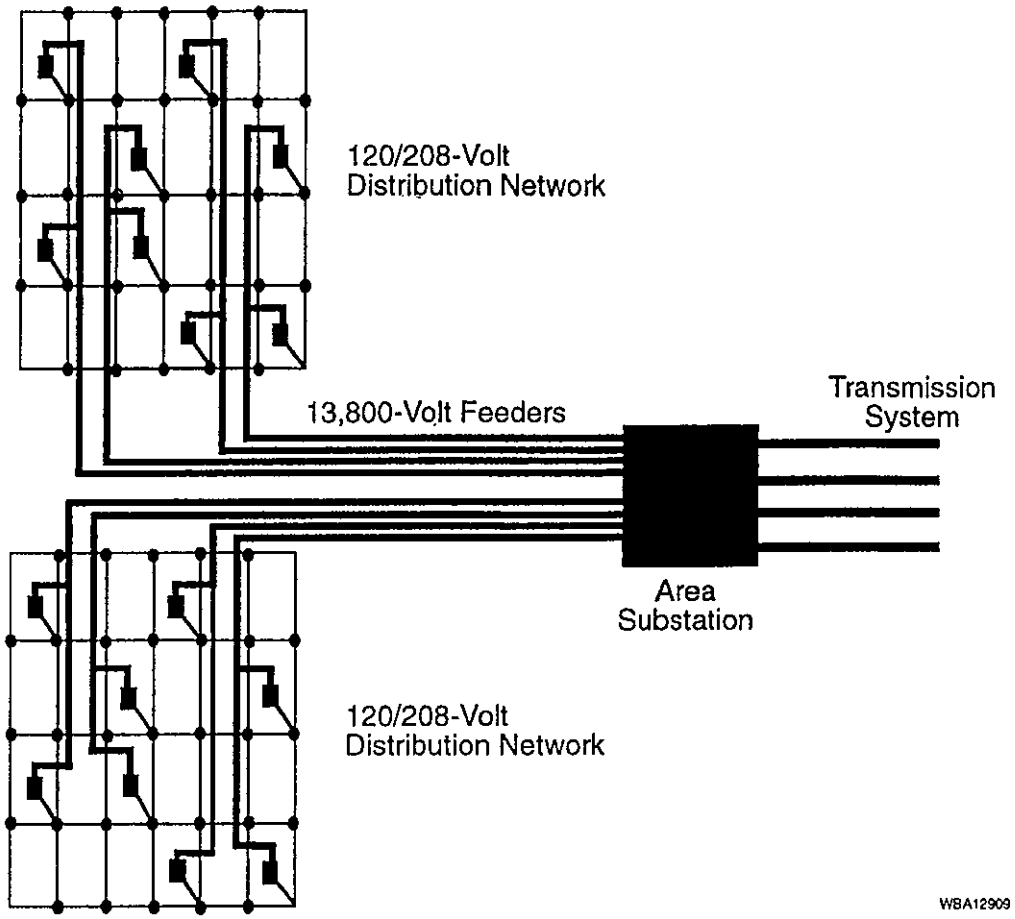

Figure 2 New York City: Consolidated Edison Distribution Network

Because of the booming economy, the load growth rates of some of the networks have increased significantly. In addition, the load usage pattern has also been changing as some customers' use of appliances has changed, causing an associated change in the electrical load profile.

2.2 Event Description

During the heat storm of July 6, 1999, the Washington Heights network in northern Manhattan had to be de-energized, which interrupted power to 68,000 customers (representing a population of 200,000) for about 19 hours. During the event, the hot weather resulted in record loads and distribution feeder losses across the Con Ed system, but the most significant outage was the loss of the Washington Heights network. The networks are robust; however, the Washington Heights network lost eight of 14 feeders during the heat storm and had to be de-energized to protect the network conductors from damage.

On Tuesday, July 6, Con Ed experienced a new record system peak load of 11,850 MW, surpassing the previous peak of 11,013 MW set on July 15, 1997. The temperature hovered around 100°F all weekend, and higher ground and masonry temperatures resulted. The July 6 peak load occurred at 10:00 p.m. instead of the typical time of late afternoon, probably because of air conditioning load from residents returning from the holiday weekend.

The Washington Heights network is supplied by 14 feeders from the Sherman Creek substation. Of these 14 feeders, six are tapped to go to the northern section of the Washington Heights network. On Tuesday morning, July 6, four of the 14 feeders were out of service as a result of failures in the cables, connections, and/or transformers. Although an analysis of the failures is still being done and details are not yet available, the failures did appear to be heat related. In spite of the high load and the loss of four feeders, the Washington Heights network was kept energized, but the network was placed in 8% voltage reduction. However, Washington Heights lost two more of the 14 feeders at about 10:29 a.m. Now, with six feeders out of service, the northern section isolated itself, thus interrupting service to approximately 15,000 customers.

By 10:00 p.m., the Washington Heights network had lost another feeder, for a total of seven. Con Ed was able to repair two feeders and restore them to service. However, moments later, one of the restored feeders tripped, and a fire at Sherman Creek substation resulted in the loss of two more feeders. Thus, eight of the 14 feeders supplying the Washington Heights network were then out of service. (The fire is still under investigation, and details on the failures are not yet available.) The loss of eight feeders was more than the network could withstand. The network had to be de-energized to protect it from massive damage and a lengthy outage for repairs.

The Washington Heights network was re-energized at about 5:00 p.m. on July 7. All but one feeder was restored by the evening of July 8. The network remained in an 8% voltage reduction until early in the morning of July 9.

In addition to the study of these events that was commissioned by Con Ed and that used independent consultants, separate investigations have been initiated by the New York Public Service Commission, the New York State Attorney General's Office, and an investigative group formed by the Mayor of New York City. The results of the Con Ed study will eventually be released but are currently confidential because of litigation. Reports on the other studies should become available in the year 2000.

2.3 POST Findings

5. **Cable condition is not accurately assessed by conventional diagnostics and practices, which may accelerate cable failure. (Information Resources; Reliability Metrics, Planning, and Tracking)** – Conventional cable testing methods, such as direct-current (DC) high-potential testing, are not always able to detect degradation or incipient failure in cable systems. In fact, the DC high-potential cable testing method being used by Con Ed may actually be aggravating

potential failure spots in the cables. Each spring, Con Ed routinely tests cables all over the city to prepare for the summer peak. Four of the feeder cables from the Sherman Creek substation had been tested in the spring of 1999. Three of the four cables had passed the test but subsequently failed during the July 6 outage. The fourth cable failed the test but was repaired and did not fail during the outage. The fact that three cables that passed the test failed later during the heat storm may be an indicator of a testing deficiency that actually contributes to cable failure.

There is presently a debate in the industry over the best way to test the insulation of distribution cables. Many of Con Ed's 13.8-kV feeder cables are insulated with XLPE. Studies suggest that DC high-potential testing on aged cable with this type of insulation may induce failures. The practice of using the DC test on cables has carried over from the time when older paper-oil types of cable insulation that are not degraded by the DC test were used. In the Con Ed feeders, XLPE-insulated cable is sometimes spliced in to replace sections of paper-oil cable, so both cable types can exist in the same feeder.

6. **Real-time data on cable temperature are not available. (Information Resources)** – The secondary low-voltage distribution system contains a large number of conductors in parallel in many possible combinations. Calculating the power flow and temperature rise for each combination of conductors requires a highly sophisticated analysis. In addition, individual network conductors are protected by fusible links, and there are no remote indications when these links are open. Thus, the thermal model can only really estimate the temperature rise of individual conductors. Real-time data on the actual thermal condition of the network cables (either calculated or measured) is not available.

7. **The harsh environment in which cables are located contributes to reliability problems. (Reliability Metrics, Planning, and Tracking)** – The salt that the city uses on the streets in the winter gets into the cable vaults, manholes, and conduits. Con Ed can actually plot the customer interruption rate versus the tonnage of salt used by the city and find a remarkably good correlation. During its visit to New York, the POST observed that the vaults were also contaminated by oil from car engines and a variety of other trash that fell through the grating. The manholes, vaults, and conduits are also routinely flooded during heavy rains and water main leaks. The combination of salt, water, oil, and constant high humidity is an extremely severe environment for cables. Lead jackets on the cable, which are very effective in these harsh environments, can no longer be used because of environmental concerns.

Section 3
Long Island: Outages and Depressed Voltages on July 3 through 8

3.1 Background

Long Island Power Authority (LIPA) is a corporate municipal instrumentality of the State of New York. LIPA owns the Long Island transmission and distribution (T&D) system, 18% of the Nine Mile Point Generating Station, and the Shoreham debt, which has been refinanced. LIPA acquired Long Island Lighting Company.

3.2 Event Description

On July 3 through 8, a heat wave covered LIPA's entire service territory and neighboring *utilities*. Service to a total of 110,000 customers was interrupted at different times during this period. The peak number of customer outages at a single point in time, about 25,000, occurred at 7:30 p.m. on July 7. A new system peak load of 4,340 MW was set on July 5, and another one of 4,590 MW was set on July 6 (a 9.1% increase over the previous year). On July 6, NYPP ordered a systemwide 5% voltage reduction, and LIPA activated its Commercial Peak Reduction Program and appealed to its other large customers to voluntarily curtail electricity use. Many organizations and government offices responded by closing early or cutting back on their electricity use.

During this period, LIPA's import capability had been reduced by 430 MW because of a derating and an outage on two system interconnections to the NYPP and New England Power Pool. One interconnection was out of service and one was de-rated because of transformer failures that had occurred in April and June of 1999. Repairs to these transformers will not be completed until the spring of 2000.

During the heat storm, loss of one major generating station on Long Island would have required load shedding. The South Fork of Long Island, an area that has experienced rapid load growth, was on the edge of *voltage collapse*. Voltage collapse probably would have occurred if the peak demand had not been reduced as a result of voluntary load curtailment procedures, a 5% voltage reduction, and load decreases associated with overloaded wire burndowns. The peak load in the South Fork on July 5 was 25% higher than last year's level.

Distribution transformer overloads were one of the primary causes of the customer outages. Approximately 1,500 transformers were replaced or supplemented following the outages. Several distribution circuits experienced load in excess of capacity, resulting in wire burndowns or damage. Because of the large amount of transformer and cable work that was done during the period, some jobs could not be addressed for more than 24 hours. The primary mainline was the component that interrupted the most customers because of burndowns, splice failures, cable failures, etc.

One outage was similar to the Con Ed Washington Heights outage. A number of feeders to the Garden City Network in Nassau County failed. The network was in risk of sustaining damage, so the remaining feeders were taken out of service, and the network was deenergized to prevent damage. After repairs to the feeders were completed, partial service was restored in 2 hours, and full service was restored in about 5 hours.

Figure 3 shows plots of South Fork load versus time on the July 5, 1999 peak, and the 1998 peak. The figure also shows the maximum steady state-limit before voltage collapse.

The overloads were mostly a result of the rapid load growth across the system, especially in the South Fork area. Many of the smaller, older homes had been recently renovated and expanded, and the existing distribution system was inadequate for the new additional load. In the South Fork area, many large vacation residences had been built, and the population density was quite high for the holiday weekend. The South Fork is a peninsula that is only served by 69-kV lines for about its first 10 miles and then by 23-kV lines over the remaining distance of roughly 15 miles.

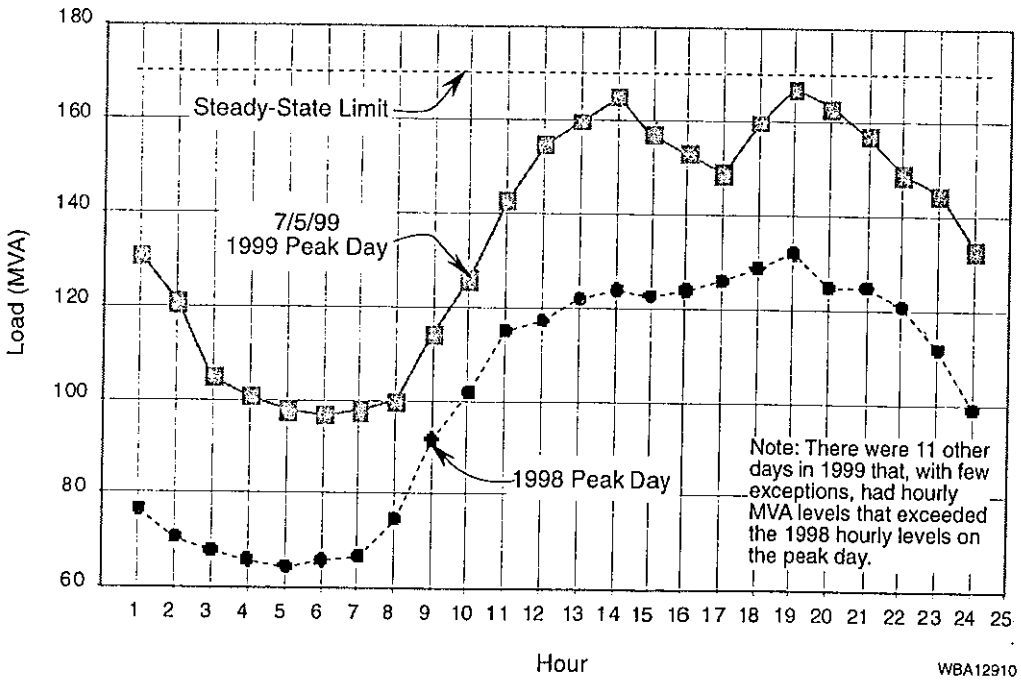

Figure 3 Long Island: Long Island Power Authority's Hourly Loads in the South Fork Area

More than 50% of the transformer overloads occurred on older 25-kVA or smaller units. Customers are required by contract to notify LIPA when they add significant load, such as air conditioning, but they rarely do so. The base size for new customer loads is now the 37.5-kVA transformer, in recognition of the trend that Long Island energy consumers are becoming more affluent and using more air conditioning and appliances.

3.3 POST Findings

8. **Load predictions have been inadequate. (Information Resources; Reliability Metrics, Planning, and Tracking)** – Load growth has been unusually rapid. In some areas, the peak load increased more than 25% in the last year. T&D capability has not kept up with load growth. There is a perception that load forecasting has been inadequate over the last two or three years. The review of the capability and condition of the existing infrastructure might not have been adequate. For example, the predicted 1999 summer peak for the South Fork was 141 *megavolts-ampere* (MVA), while the actual peak was 167 MVA, 18% higher than the forecast. Although much of the increase resulted from the booming economy, LIPA forecasting methods still appear to be inadequate.

9. **Transformer failure and associated interconnection problems can require lengthy equipment repair times. (Reliability Metrics, Planning, and Tracking)** – LIPA import capability was reduced by 430 MW because two key transformers providing interconnections to the NYPP and New England Power Pool had failed in the spring. These transformers could not be replaced quickly and had to be repaired because they were unique, nonstandard designs. The repair time was on the order of one year. Manufacturing capability for large transformers has largely been lost in the United States, and replacing large transformers requires very long lead time items.

10. **Traditional methods (e.g., construction of new transmission and central generation) for supplying electric power to load pockets were not able to keep up with load growth. (Regulatory Policy for Reliable Transmission and Distribution)** – The South Fork of Long Island was on the edge of voltage collapse because new generation and transmission had not kept up with the load growth. Load growth had been extremely rapid, with an increase in peak load up to 25% in one year. There has been local resistance to the construction of new, higher-voltage transmission lines and new generating stations in the area.

Section 4
Mid-Atlantic Area: Voltage Declines on July 6 and 19

4.1 Background

PJM Interconnection, LLC, (PJM) is a regional transmission provider responsible for transmission planning and a *control area* operator, NERC *security coordinator*, and operator of the Mid-Atlantic integrated energy market. This integrated energy market consists of markets for energy, regulation, daily capacity credit, monthly capacity, and fixed transmission rights. The energy market shifted from being cost based to market based in April 1999.

PJM is the largest centrally dispatched electric power system in North America. It consists of 8,000 miles of transmission lines and 540 generating facilities. The system encompasses New Jersey, Delaware, the District of Columbia, and parts of Pennsylvania, Maryland, and Virginia. PJM 500-kV interconnections support trade with nonadjacent control areas throughout the eastern interconnection. For all intents and purposes, PJM comprises all of the Mid-Atlantic Area Council (MAAC). All MAAC functions and services are provided by PJM staff.

4.2 Event Description

The PJM grid, a summer peaking system, was severely tested during two heat waves that occurred in the eastern United States during July 1999. These heat waves were unusual with regard to their temperature, humidity, duration, and geographical extent. On the worst day, July 6, bulk power system *emergencies* extended from New England to Virginia and perhaps even further south. The most adverse impacts occurred on the PJM system, which experienced sudden and steep voltage declines at many locations. An all-time-high peak load (51,600 MW) was recorded for the PJM grid on July 6, 1999. A similar voltage problem occurred during a less severe heat storm on July 19.

In both the July 6 and 19 instances, the integrity of the PJM system was maintained as a result of emergency actions that involved voltage reductions and curtailment of contractually interruptible customers. Load shedding, through "rolling blackouts," was implemented by local control centers, and there was limited intervention in the market, where prices rose to more than $900 per *megawatt-hour* (MWh). The precise causes of the voltage declines are still under investigation. However, it appears that the more rapid recovery on July 19 may be partially explained by the fact that PJM implemented lessons learned on July 6.

July 6 was the third day of the first July heat wave and the first business day after the July 4 holiday weekend. The weather conditions that occurred on July 6 are estimated to occur only once every 25 years. On the basis of these conditions, PJM's projected load for the day (52,900 MW) was 6% higher than the preseason forecasted

peak load. PJM's actual load (51,600 MW) was 4% greater than the prior record of 49,406 MW set in 1997. This new record was set during the same hour that new records were being set in the neighboring New York and New England systems.

At 9:18 a.m. on July 6, PJM began initiating emergency procedures on the basis of a forecast that there would be only 650 MW of operating reserves for the afternoon peak period (well below the planning target of 1,700 MW). The procedures included initiating load management for interruptible customers, notifying generators to increase *reactive power* output, and scheduling generation to be available to serve load later in the day. Because of the increased volume of requests received, PJM also reduced the amount of flexibility it allowed for market participants to schedule transactions. Since transmission loading relief (TLR) procedures were already being issued by neighboring systems, imports to PJM were limited. Until about 1:00 p.m., PJM provided emergency exports to NYPP, which had already ordered a voltage reduction at 10:56 a.m.

Between 12:00 noon and 1:00 p.m. on July 6, voltages on the PJM system began to drop precipitously (Figure 4). PJM responded by taking its remaining, short-lead-time, interruptible customers off line, starting maximum emergency generation, issuing appeals for voluntary customer load curtailment, and curtailing emergency exports to NYPP.

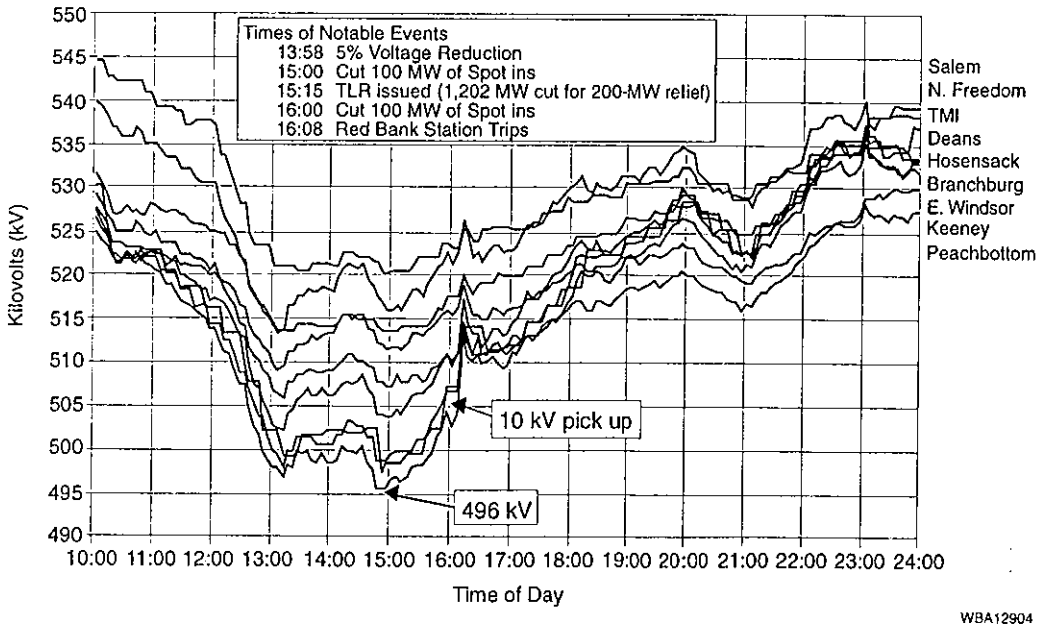

Figure 4 Mid-Atlantic Area: PJM Interconnection 500-kV Voltage Profile on July 6, 1999

Starting shortly after 1:00 p.m., voltages stopped dropping, and, in some areas, they began to recover. However, between about 1:00 and 4:00 p.m., voltages remained low. Moreover, they dropped slightly again just before 3:00 p.m., before they started to recover. During this period, PJM ordered a 5% voltage reduction. It also took actions to reduce the effect of parallel flows on its system by issuing a TLR on the eastern PJM-to-NYPP flowgate. The load loss that resulted from the outage at the Red Bank substation (described in the section on New Jersey) had a measurable beneficial impact on PJM system voltages, although by this time, system voltages were already recovering. By 10:21 p.m. that July 6 evening, the last emergency action taken by PJM was lifted. So on July 6, PJM had operated for 12 consecutive hours above its previous all-time load.

On July 19, 1999, PJM experienced a similar drop in system voltages. Once more, the drop started at about 12:00 noon and reached a low point at about 1:00 p.m. (Figure 5). PJM implemented a series of actions that included a 5% voltage reduction, load management, increased eastern generation, and reduced imports from the west. In contrast to the slow restoration of voltages that occurred on July 6, on July 19, the system responded quickly, and normal voltages were restored within about one hour.

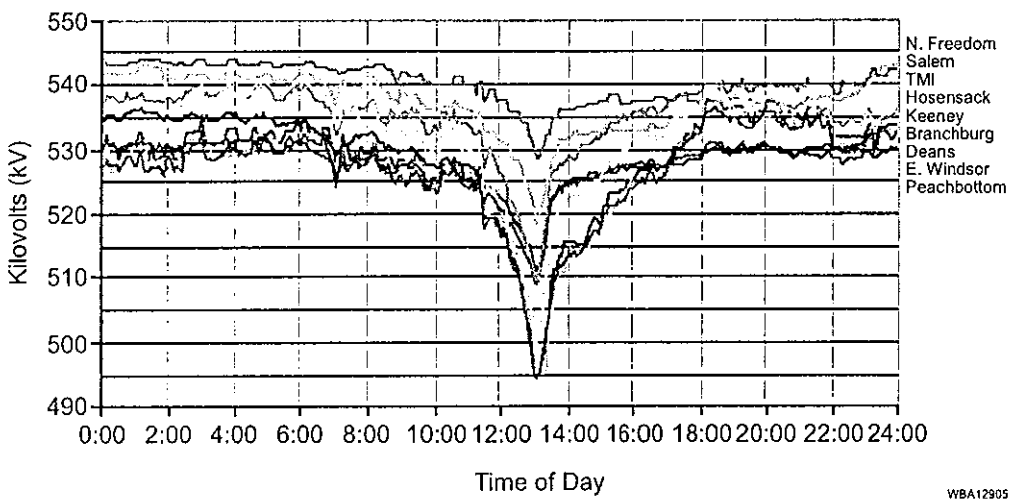

Figure 5 Mid-Atlantic Area: PJM Interconnection 500-kV Voltage Profile on July 19, 1999

4.3 POST Findings

11. **Unit ratings were not consistent with operating performance during periods of high loads. (Information Resources; Reliability Metrics, Planning, and Tracking)** – When PJM called for maximum production of reactive power, many generating units were not able to provide levels of real and reactive power consistent with their expected capabilities. This was evident during both the July 6 and 19 events. Immediately following the event on July 19, PJM instructed all generators to re-rate units for their ability to produce reactive power.

12. **There may not be adequate incentives for reactive power production. (Transition to Competitive Energy Service Markets; Regulatory Policy for Reliable Transmission and Distribution)** – At the time of these events, there were no economic incentives for generators to produce reactive power. In fact, there was a disincentive, since generators operating at full capacity generally have to cut back on *real energy* production to increase reactive power production (as requested by PJM during these reliability events). Thus, their sales and earnings are reduced. PJM has since negotiated with generators to compensate them for their lost opportunity costs and has filed a tariff with the *Federal Energy Regulatory Commission* (FERC) to provide the same compensation in the future.

13. **Planning tools did not predict significant voltage degradation during periods of high loads. (Information Resources; Operations Management and Emergency Response)** – PJM operators were surprised by each of these events. The severe declines in voltages were not predicted for the operating conditions being experienced. The duration of the voltage decay on July 6 could be an indication of a delayed response to the problem or a lack of adequate policies and procedures to address the issue. When the tools and experience to predict and respond to such events are not available, there is a risk of voltage collapse. Indeed, PJM staff members informed POST that they had identified three contingencies that might have produced voltage collapse under the conditions experienced on July 6 and 19.

Section 5
New Jersey: Outages on July 5 through 8

5.1 Background

Two utilities were involved in the New Jersey outages. Public Service Electric and Gas Company (PSE&G) suffered outages related to cable and switchgear troubles at the Englewood substation and City Dock substation. GPU Energy (GPU) suffered outages resulting from transformer problems at its Red Bank substation. The experience of each utility is described in Section 5.2.

PSE&G is a wholly owned subsidiary of Public Service Enterprise Group Incorporated. PSE&G supplies electric and gas service to approximately 5.5 million people in a corridor of roughly 2,600 square miles that runs diagonally across New Jersey, from Bergen County in the northeast to an area below the city of Camden in the southwest. This heavily populated, commercialized and industrialized territory encompasses about 70% of the state's population and most of its largest municipalities, including the six largest cities – Newark, Jersey City, Paterson, Elizabeth, Trenton, and Camden — and 300 suburban and rural communities. PSE&G has an installed generating capacity of 10,400 MW.

GPU, Inc., is a holding company that owns all of the outstanding common stock of three electric utilities serving customers in New Jersey. These are the Jersey Central Power & Light Company, Pennsylvania-Metropolitan Edison Company, and Pennsylvania Electric Company. The customer service, transmission, and distribution operations of these electric utilities are conducting business under the name GPU.

As of December 1, 1998, the GPU companies had an installed capacity of 11,076 MW. In October 1997, GPU announced its intention to sell, through a competitive bid process, up to all of the fossil-fueled and hydroelectric generating facilities owned by the companies. These facilities, which consist of 26 operating stations, support organizations, and development sites, total approximately 5,300 MW of capacity and have a net book value of approximately $1.1 billion. In addition, GPU is selling its two nuclear plants, which total 1,430 MW of capacity.

5.2 Event Description

5.2.1 Englewood Substation (PSE&G)

This section describes the series of equipment failures that occurred at the Englewood, Hudson Terrace, and CitiBank substations and within the 26-kV Bergen County loop. Interconnections among these substations are shown in Figure 6. At 5:04 p.m. on July 5, 1999, a terminator fault on a 26-kV riser pole tripped circuit B-262,

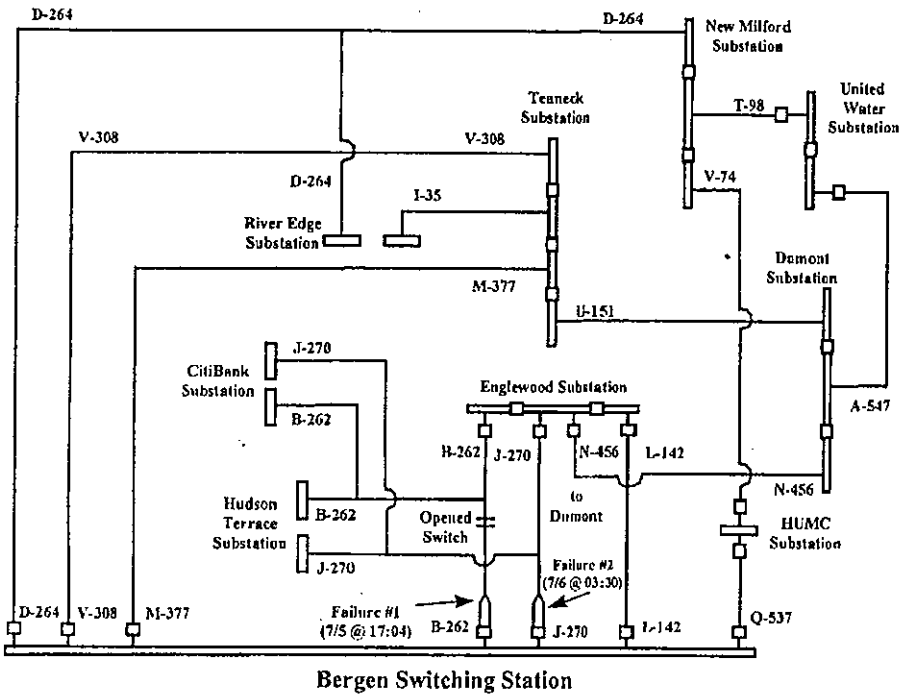

Figure 6 New Jersey: Public Service Electric and Gas Company Interconnections to Bergen Switching Station

which feeds the Englewood, Hudson Terrace, and CitiBank substations from the Bergen switching station.

On the next day, July 6, at 3:20 a.m., the faulted section (which ended at the Bergen switching station) was isolated, and the remaining two sections of circuit B-262 were re-energized from the Englewood end. However, a short while later, at 3:30 a.m., a cable failure tripped a second circuit, J-270, that feeds the three substations. This incident resulted in shutdowns of the Hudson Terrace and Citibank substations. At 5:40 a.m., the remaining two sections of circuit B-262 were used to restore service at Hudson Terrace. CitiBank remained on customer-operated backup.

At 8:17 a.m., PSE&G began load shedding operations to reduce loading on circuit L-142, the third and only remaining direct supply circuit into Englewood substation from the Bergen switching station, and on circuit N-456, which supplies Englewood from the Damont substation. Load shedding affected about 8,000 customers. Load shedding was concluded at 6:05 p.m. on July 6, after circuit B-262 was repaired. At 6:19 p.m., circuits L-142 and N-456 tripped and locked out, leaving only circuit B-262 to support the Englewood substation and Hudson Terrace substation load for the next 31 minutes. At 6:50 p.m., the Number 3 transformer at Englewood substation locked out from an

overload condition. This event shut down the Englewood substation, interrupting service to about 9,400 customers. Service to most customers was restored within 34 minutes, but a load-shedding *schedule* was implemented that lasted another eight hours into the following morning of July 7. At 7:45 p.m. on July 6, while circuit L-142 was being restored to service at Englewood, the substation shut down again as the result of an internal failure in a bus tie breaker. Service to a majority of the customers was restored within 25 minutes. Equipment repairs were completed late in the evening of July 9.

5.2.2 City Dock Substation (customer-owned substation on PSE&G system)

Serious difficulties also occurred at City Dock substation. On July 6 and early on July 7, 1999, multiple terminator and cable failures affected three of the four City Dock transformers. In one case, a cable failed twice, with the second failure occurring immediately after the cable had been placed back into service after repairs. At 2:30 a.m. on July 7, PSE&G intentionally shut down the entire substation to protect the one remaining transformer. This shutdown affected 2,600 customers. The one remaining transformer was used to restore service to four large customers (including the city subway and train/bus station) at 3:54 a.m., an hour and a half later. However, at 4:40 a.m., another terminator failure tripped out the remaining transformer, and City Dock substation was shut down for a second time. Restoration of service from this second shutdown to all customers took just under 11 hours.

5.2.3 Red Bank Substation (GPU)

During the heat wave of July 5 through 7, 1999, two of the four transformers at Red Bank substation failed. Both failed transformers were damaged and could not be returned to service quickly. This situation led to both scheduled and unscheduled outages that affected more than 100,000 customers. All customers were restored to service by 1:20 a.m. on July 8.

The Red Bank substation has four 230-kV to 34.5-kV transformers (Units 1, 2, 7, and 8). Late in the evening on July 5, a high-voltage bushing on transformer Unit 2 failed and caught fire, damaging other connectors. This event did not result in any immediate customer interruptions. However, GPU requested curtailments the next day in anticipation of high afternoon loads that might overload the remaining Red Bank transformers.

In fact, by the afternoon of July 6, Unit 1 was overheating, and GPU curtailed load to some customers. Just after 4:00 p.m. on July 6, unit 8 began overheating and was taken out of service. Immediately afterward, Unit 7 automatically shut down. Loss of Unit 7 and Unit 8 resulted in interruptions of service to customers. At about 6:30 p.m., Unit 8 was returned to service. However, one minute later, Unit 1 automatically shut down. Service to additional customers was interrupted.

Tests during the morning of July 7 revealed that Unit 1 had been damaged and could not be returned to service. GPU began planning four-hour rolling interruptions during peak load periods until Unit 2 could be replaced. GPU, in fact, had two spare transformers on site at the Red Bank substation and was able to install one by 4:17 a.m. on July 9. By 1:20 a.m. on July 8, all customers were restored to service. The second failed transformer was replaced by July 13.

5.3 POST Findings

14. **There are no reliable tests for identifying incipient failures in feeder cables. (Information Resources; Reliability Metrics, Planning, and Tracking) –** PSE&G experienced multiple cable failures at its Englewood and City Dock substations. PSE&G staff informed POST that improved testing methods are needed to identify incipient cable failures, and that the company has begun a pilot program of low-*frequency* discharge testing for paper-insulated and lead-covered cables.

15. **Mechanisms for sharing information on maintenance best practices and equipment performance among distribution utilities were inadequate. (Regulatory Policy for Reliable Transmission and Distribution; Reliability Metrics, Planning, and Tracking) –** There are few incentives for sharing data on equipment maintenance and performance characteristics. In some cases, research in this area is proprietary and not readily available to all utilities.

16. **Utilities may experience lengthy delays in replacing failed critical equipment. (Regulatory Policy for Reliable Transmission and Distribution; Reliability Metrics, Planning, and Tracking) –** The GPU system has approximately 50 transformers like the ones that failed at its Red Bank substation, and at the time of those failures, it had only two spare transformers. Luckily, those were stored at the Red Bank substation. Large transformers like these are difficult to move because of their size and weight (more than 200 tons). Furthermore, they are no longer manufactured in the United States. Replacement or repair of large transformers can take a year or longer. Since the transformer failures at Red Bank, GPU is increasing the number of spares it keeps from two to four.

Section 6
Delmarva Peninsula: Outages on July 6

6.1 Background

Delmarva Power & Light Company (DPL) is a regulated public electric and gas utility and a wholly owned subsidiary of Conectiv. DPL's main electric utility business activities are generating, purchasing, delivering, and selling electricity. DPL serves approximately 455,300 electric customers within its service territory, which has a population of approximately 1.2 million and covers an area of about 6,000 square miles on the Delmarva Peninsula. This includes Delaware, 10 primarily eastern shore counties in Maryland, and the eastern shore of Virginia.

As of December 31, 1998, the net installed electric generating capacity available to DPL for serving its peak summer load was 3,519 MW. This capacity consisted of conventional steam generating units (50% of installed capacity); nuclear generating units (9%); combustion turbines/combined-cycle generating units (19%); long-term purchased capacity (7%); customer-owned capacity (2%); and short-term purchased capacity (13%). DPL expects to sell some of its generating units as part of its restructuring business strategy.

6.2 Event Description

The DPL system was severely affected by the first heat wave of July 1999, which for DPL extended from July 3 to July 6. High loads combined with various generation outages to produce a capacity shortfall that could not be remedied through energy imports on the transmission system. On the worst day, July 6, DPL implemented rotating outages from 10:30 a.m. until 7:30 p.m. Approximately 138,000 customers experienced outages of varying duration and frequency.

On July 5, overall load for the Delmarva Peninsula was at its highest. An all-time-high peak demand of 3,425 MW was recorded, which exceeded the previous record by 5.4%. This total included loads for the City of Dover and for Easton Municipal Utility in addition to that for DPL. The demand forecasted for July 6 was even higher, to respond to the continued hot weather and meet the expected increased demand on the first business day following the July 4 weekend.

As July 6 began, DPL was faced with meeting a forecasted record peak demand without the *availability* of two of its major generating units. Indian River Unit 3 (IR3, 165 MW) had been damaged on June 9, while it was being restored to service after a scheduled maintenance. It was not expected to be back in service until later in the year. Also, during the evening of July 5, Edgemoor Unit 3 (86 MW) became unavailable as the result of a leak in a boiler tube.

By 10:00 a.m. on July 6, DPL had already began preparations for load management, in response to internal DPL conference calls and a conference call with PJM. At 10:35 a.m., Indian River Unit 2 (IR2, 91 MW) tripped off line, which immediately resulted in 58 alarms indicating voltages below 95%. An additional 27 low-voltage alarms sounded in the following minute. DPL immediately initiated load control to shed 60 MW of load in the form of rolling outages. This generator trip was traced to moisture buildup in the control panel. The condition was remedied with drying equipment, and the unit was made ready for service within two hours. Low voltages delayed restoration of IR2 until 4:21 p.m., however.

By 1:00 p.m., demand had increased to 3,324 MW, even with 60 MW of load shedding and load management. Separately, PJM reported operational problems and low voltages on the main grid (see discussion of PJM in Mid-Atlantic area). DPL staff asserts that the low voltages on the PJM system precluded DPL from obtaining more energy imports from PJM.

Subsequent studies performed by POST and others indicate that DPL operator concerns regarding imminent voltage collapse were well founded. The POST study of the Delmarva reliability event is described in Appendix A and is depicted on the cover of this report.

Four DPL combustion turbines tripped at various times during the afternoon, with three returning to service within an hour. From about 1:00 p.m. to 5:30 p.m., the company implemented 120 MW of rotating load shedding and 20 MW of manual load shedding. Load shedding ended by 7:30 p.m.

6.3 POST Findings

17. **Forecasting methods used by system planners did not accurately predict peak summer loads. (Reliability Metrics, Planning, and Tracking)** – The severity and longevity of the heat and humidity during this reliability event were very unusual. DPL did not plan for the loads associated with these conditions.

18. **Summer ratings for electric generating units were calculated for normal summer temperatures and were not consistent with performance during periods of unusually high temperatures. (Operations Management and Emergency Response)** – During periods of high temperatures and humidity, generating units generally do not perform as well as they do during times of normal temperatures. Peak summer loads are associated with high temperatures and humidity, and it is precisely at that time that unit ratings are critical to reliable operations. Planning and operations need to be based on ratings that are relevant at the time of peak loads.

19. **Retail customers have limited mechanisms and incentives to conserve energy or resort to alternatives during electricity shortages. (Transition to Competitive**

Energy Service Markets) – DPL's reserves were depleted on July 6, and operators had to resort to rotating outages to reduce load when IR2 was forced out of service.

20. **Notice requirements in load management contracts do not permit an efficient response to emergencies. (Transition to Competitive Energy Service Markets; Operations Management and Emergency Response)** – DPL contracts for interruptible loads are not amenable to quickly responding to generator outages. Contracts for interruptible loads require advance notice, and, in DPL's case, they limit service interruptions to only six hours. The advanced notice requirement prevented DPL operators from shedding interruptible loads as an immediate response to the outage of IR2. The duration limits prevented the use of interruptible loads in the morning hours, because these loads would then be coming back on line during the afternoon peak.

21. **Reliability criteria for generation reserves were not sufficient to avoid regular power shortfalls. (Reliability Metrics, Planning, and Tracking)** – DPL planning was based on meeting the load associated with the average high summer temperature. Higher-than-average peak summer temperatures, combined with depleted reserves that had resulted from prior outages, left DPL operators with no option but to shed load when IR2 failed.

Section 7
South-Central States: Rotating Outages on July 23

7.1 Background

Entergy is a vertically integrated power company that serves approximately 2.5 million customers in parts of Louisiana, Arkansas, Texas, and Mississippi. It is a member of the Southeastern Electric Reliability Council (SERC) and participates in the Southwest Power Pool (SPP) operating-reserve-sharing program, which allows it to share operating reserves of electric power. An agreement between Entergy and SPP recognizes that both parties benefit from Entergy's continued participation in the program. The members of the SPP's reserve-sharing group share operating reserves as a cost-saving measure, while continuing to meet NERC reserve requirements. Entergy has about one-third of the total SPP load and a proportionate share of the total SPP group reserves.

The use of reserves is commonplace within the SPP. On average, members of the SPP reserve-sharing program file 300 contingencies per year. To use reserves, members must declare some level of emergency or outage. However, if a company faces a loss of service to firm load that does not involve an emergency or outage (e.g., insufficient generation), SPP can declare an emergency, as well as approve and allocate the use of reserves. Reserves are allocated on a first-come, first-served basis.

At the start of the summer of 1999, Entergy had a total operational capability of 22,689 MW. The bulk of this capacity (21,056 MW) came from 79 generating units owned either totally or partially by Entergy. Entergy assessed the situation and concluded that it needed to acquire an additional 1,700 to 1,900 MW of energy to ensure sufficient system reliability during the summer peak. Entergy decided to meet this goal as follows:

- Return to service 12 units with a total generating capacity of 583 MW that had been under an "extended reserve shutdown,"
- Purchase 600 MW of nonfirm energy from the Tennessee Valley Authority (TVA) and 250 MW of nonfirm capacity from the PECO Energy Company (PECO), and
- Make short-term purchases of power.

7.2 Event Description

At a 7:00 a.m. meeting on July 22, 1999, the SPP issued a daily load and capability report, which included a projection for July 23. Several utilities were expected to have small (or, in one case, negative) excess firm capacity. On July 22, Entergy was experiencing forced outages from seven units (totaling 1,943 MW), and the output capacity of five additional units was significantly derated (with deratings totaling

678 MW out of a total capacity of 2,730 MW). Entergy officials requested that unit operators run each unit at full capacity during the July 22 peak to gauge the capability of their generation facilities to meet customer needs. (Because of lower than normal temperatures since early June, the units had not run at full capability.) At 6:30 p.m. on July 22, Entergy discussed issuing a public appeal for voluntary conservation. Given the current forecast and the estimated status for July 23, Entergy expected reserves to exceed firm load by 2,100 MW during the July 23 peak. As a result, Entergy anticipated that it would need to curtail about 1,500 MW of interruptible and curtailable retail load and limited firm wholesale load on July 23. Entergy decided not to issue a public appeal for conservation for July 23.

At the 7:00 a.m. planning meeting on July 23, Entergy previewed what was to be the start of a difficult day. First, SPP's daily load and capability report for July 23 reflected a change of 200 MW in Entergy's forecasted demand. Second, Entergy learned from personnel at Waterford Unit 1 that the 411-MW unit would not return to service for the July 23 peak, as previously anticipated. Third, findings from the July 22 analysis of unit capability showed that a significant number of plants had not performed as expected. The analysis showed a large number of small deratings totaling 500 MW.

Because of these three events, Entergy's estimate of its reserves for the July 23 peak was reduced to 1,000 MW. As a result of this new estimate, the Entergy Operating Subcommittee decided that service to all interruptible and curtailable service retail customers and firm wholesale customers would have to be fully utilized unless purchases could be made on the wholesale market. At 8:03 a.m., Entergy declared a Level 1 NERC Energy Emergency Alert[4] and put into motion steps to issue a public appeal for voluntary conservation, only its third such request in 20 years.

SPP's load and capability report for July 23 reflected additional changes from the previous day. Excess operating reserves for the SPP declined to 1,186 MW, and four control areas were forecast to have negative excess firm capacity at the time of peak demand.

At 8:07 a.m., Entergy's Nine Mile Unit 5, with a capacity of 737 MW, suffered a bearing problem with a condensate booster pump. This event forced Entergy to derate the unit by 323 MW. At the same time, problems also began to develop with the main turbine control system at Entergy's Baxter Wilson Unit 1. At 8:30 a.m., Entergy was forced to partially derate approximately 200 MW, while efforts were made to rectify the situation. At 10:00 a.m., the Entergy Operating Subcommittee met with Entergy senior executives to review the situation in preparation for releasing the conservation appeal. At

[4] From NERC Operating Manual, Appendix 9B – Emergency Energy Alerts: "Alert 1 – All available resources in use. Circumstances: Control area, reserve sharing group, or load sharing entity foresees or is experiencing conditions where all available resources are committed to meet firm load, firm transactions, and reserve commitments, and is concerned about sustaining its required operating reserves. Non-firm energy sales have been curtailed."

noon, Entergy declared a Level 2 NERC Energy Emergency Alert[5] and released a public appeal for conservation through a variety of media outlets. Regulatory commissions affected by Entergy's conservation appeal were also notified. At this time, Entergy realized that on the basis of current conditions, it needed to implement additional measures to meet demand.

At 1:00 p.m., Kansas City Power and Light (KCPL) entered two other extreme condition (OEC) contingencies. The first, 150 MW, was expected to extend until 2:00 p.m. The second, 96 MW, was the result of a lack of KCPL reserves and would likely persist through 7:00 p.m.

Entergy continued efforts to purchase power, but, for the most part, the company faced a lack of availability. Only one power *marketer* had any substantial power available, but by the time transmission issues were resolved, that power was no longer available. Entergy Distribution then alerted operations personnel of the critical nature of the problem and requested that they prepare to implement load shedding procedures.

At 1:19 p.m., Entergy derated its White Bluff Unit 1, an 800-MW unit, by about 450 MW. This change was necessitated by the loss of one of two induced draft fans used at the plant. This problem reduced Entergy's projected reserves above firm load (including nonfirm purchases) to 50 MW. At 1:27 p.m., as a result of this and earlier deratings, Entergy entered an OEC contingency with the SPP to remove its 726 MW of SPP reserves. Entergy asked the SPP that this OEC contingency be extended past 2:00 p.m. because it would not have its reserves by that time.

At 1:42 p.m., Entergy's Baxter Wilson Unit 1 tripped because of abnormal conditions in the main turbine control system. Since Entergy had already derated this unit in an attempt to cope with the problem, Entergy's derate this time was approximately 300 MW. Entergy now had a negative reserve above firm load, including nonfirm purchases for the day's peak load. Entergy entered a 505-MW derate contingency with the SPP and received immediate assistance from the SPP of 505 MW, for a period extending until 2:30 p.m. Entergy requested another 400-MW contingency from the SPP to cover the earlier derating of White Bluff Unit 1. The SPP asked Entergy to refrain, since the Baxter Wilson Unit 1 contingency left SPP with 304 MW of reserves.

At 1:59 p.m., Western Resources (WR) lost Jeffrey Unit 3 and entered a 700-MW derating contingency, creating a reserve deficiency for SPP. SPP's operating reserve-sharing software — SCCSWin — was unable to develop a feasible schedule. Therefore, SCCSWin output its most recent, infeasible solution and distributed this fictitious

---

[5] From NERC Operating Manual, Appendix 9B – Emergency Energy Alerts: "Alert 2 – Load management procedures in effect. Circumstances: Control area, reserve sharing group, or load sharing entity is no longer able to provide its customers' expected energy requirements, and is designated as an energy deficient entity. Energy deficient entity foresees or has implemented procedures up to, but excluding, interruption of firm load commitments...."

schedule to all reserve-sharing participants. Pool members then began to call SPP, asking it to check the validity of the schedule. The SPP found that the schedule was invalid and asked members seeking reserves to speak directly with WR. Although the reserve-sharing program malfunctioned at 1:59 p.m. and issued fictitious schedule notifications to participants, KCPL and Entergy continued to receive assistance, as scheduled. At this time, SPP had a reserve deficiency of 396 MW because five contingencies totaling 2,177 MW had been entered in the last hour.

During the 2 p.m. hour, Entergy continued to inquire about purchasing power from several parties. While none of these parties had power available, some agreed to assist Entergy in looking for power. SPP contingency events continued. At 2:09 p.m., Sunflower Electric Corporation lost its Garden City unit and entered a 50-MW derating contingency. At 2:18 p.m., WR lost Lawrence Energy Center Unit 5 and entered a 340-MW derating contingency. The SCCSWin software produced fictitious schedules for each of these contingencies.

At 2:14 p.m., Entergy Distribution sent a high-level alert to all key operational management to be prepared to implement the load shedding plan. At 2:20 p.m., TVA notified Entergy that 100 MW of interruptible energy would be withheld beginning in 10 minutes. SPP assistance to Entergy for the Baxter Wilson outage ended at 2:30 p.m. Since WR's Jeffrey Unit 3 contingency had not received valid assistance schedules from the reserve-sharing program, SPP asked its control areas to make their operating reserves available to WR. SPP informed Entergy that the 505 MW in emergency assistance would not be available after 2:30 p.m. Therefore, Entergy lost its emergency assistance from SPP, while system contingent firm purchases from TVA dropped by 100 MW. As a result of these actions, Entergy was again at a deficit with regard to firm load for the daily peak — this time by 350 MW.

At 2:35 p.m., Entergy learned of two additional problems. First, TVA was going to hold back another 300 MW of interruptible energy beginning in 10 minutes. Second, operating conditions at White Bluff Unit 1 had worsened. Because inlet temperatures for the operating fan were approaching unsafe levels, White Bluff Unit 1 (now operating at 326 MW) was likely to be the next forced outage victim. Taking these facts into consideration, along with the fact that the utility was already 350 MW in deficit relative to firm load for the daily peak, Entergy decided to curtail firm load.

At 2:42 p.m., Entergy began to curtail 900 MW of firm load. This curtailment was based on the share of firm load relative to the total firm load in the Entergy system for each of the Entergy corporations,[6] and customers were rotated on a 20- to 30-minute cycle. More than 550,000 unique customers suffered load curtailment between 2:42 p.m. and 5:00 p.m. Some customers experienced more than one load curtailment during this

[6] Entergy Arkansas, Inc.; Entergy Mississippi, Inc.; Entergy Louisiana, Inc.; Entergy Gulf States, Inc. (Louisiana); and Entergy New Orleans, Inc.

period. While rotating blackouts were being performed, some short, unintended outages occurred.

At 2:45 p.m., Entergy lost 300 MW of interruptible energy from TVA (as expected) and declared a Level 3 NERC Energy Emergency.[7] At 3:00 p.m., SPP set WR's required reserves (147 MW) to zero in the reserve-sharing program. Of the day's requirement (1,781 MW), 969 MW of required reserves was not available. Entergy's White Bluff Unit 1 finally tripped at 3:01 p.m. Through 3:15 p.m., Entergy's efforts to buy power continued to be fruitless. According to Entergy's audio records, only WR had any significant power available — 200 MW on the basis of a call at 3:01 p.m.

At 3:15 p.m., 300 MW of interruptible energy from TVA was restored to Entergy. Entergy purchased 45 MW of power at prices as high as $2,500/MWh, which allowed the company to return 300 MW of firm load to service. At the same time, a partial restoration of Baxter Wilson Unit 1 provided about 50 MW. At 3:39 p.m., Entergy's Willow Glen Unit 5, a 550-MW unit, tripped when both data processing units in the burner control system malfunctioned. The malfunction occurred because moisture entered the control system equipment cabinets.

At 4:00 p.m., KCPL was able to supply its 96 MW of allocated reserves. At the same time, Entergy recovered the balance of its system contingent firm purchases from TVA, with 100 MW restored. In addition, Entergy purchased 405 MW from five entities. Spot power prices ranged up to $1,200/MWh. At 4:41 p.m., Entergy was able to partially return Waterford Unit 1 to service, for a total gain of 50 MW. At 5:00 p.m., WR again supplied its reserves. At the same time, Entergy purchased 900 MW of power at prices up to $500/MWh. This enabled Entergy to totally restore the firm load that had been curtailed. Entergy purchased even more power in the following hour, and the utility was again able to supply its reserves at 6:00 p.m.

Other events affected the South-Central States during the summer of 1999. On August 13, significant demands occurred across SERC in general and TVA specifically, while cooler temperatures and lower demands prevailed across the upper Midwest and Plains States. Power flows from MAPP to SERC caused low-voltage conditions in northwest Arkansas and northeast Oklahoma. Voltage dropped as low as 94% to 95% on 345-kV lines, while voltage dropped as low as 90% on 161-kV lines. On August 19, high demand was prevalent in Southern Company and other utilities in SERC, while lower temperatures prevailed in the Midwest. Power flows from the East Central Area Reliability Coordination Agreement (ECAR) and Kentucky caused low-voltage

[7] From NERC Operating Manual, Appendix 9B – Emergency Energy Alerts: "Alert 3 – Firm load interruption imminent or in progress. Circumstances: Control area or load sharing entity foresees or has implemented firm load obligation interruption...."

conditions at the northern border of TVA's service territory. A total of 12,000 MW flowed across the TVA system, leading to 3- to 4-kV voltage oscillations.[8]

7.3 POST Findings

22. **Summer ratings and actual capability of generating units are not always consistent. (Information Resources; Reliability Metrics, Planning, and Tracking)** – There are concerns over the determination of summer ratings in comparison with the actual capability shown on July 23. The 500 MW in small deratings is equivalent to a moderate-sized fossil unit.

23. **Problems in anticipation and delays in the application of public appeals limited the effectiveness of the appeals once they were made. (Operations Management and Emergency Response)** – Public appeals for conservation have a limited, temporary effect. Public appeals are most effective when issued with sufficient anticipation. Considering the event of July 23, day-ahead public appeals were not issued because at the time it was thought that reserves would be adequate. Eventually, public appeals were issued prior to the rotating blackouts. Entergy's lack of relative familiarity with the public appeals process was also a constraining factor on the system. Because Entergy had issued only two public conservation notices in the previous 20 years, comprehensive mitigation strategies were not in place, forcing a series of meetings that eventually led to a noon public notice for conservation.

24. **Reliance on nonfirm purchases to meet operating reserve targets results in inadequate reserves during regionwide events of high demand. (Operations Management and Emergency Response; Reliability Metrics, Planning, and Tracking)** – Entergy calculated its reserves as a combination of own capacity, firm and nonfirm interchange transactions, and load management. Relying on other members of a reserve-sharing agreement for reserves saves significantly on operating reserve costs under most conditions. However, in situations like July 23, reserves are not used in a "normal" mode. Operating reserves can be used any time the firm load is likely to be curtailed. Under conditions of high demand, the probability of firm load curtailment is consequently higher because more members of the reserve-sharing agreement are utilizing their full capability and counting on nonfirm purchases to maintain reserve. Also, any nonfirm purchase under conditions in which power markets are approaching extreme conditions is subject to recall. This greatly increases the uncertainty in peak demand obligations. This observation is not taken into consideration in the analysis of reserve requirements.

---

[8] More details on these and other low-voltage events in the Eastern Interconnection have been discussed by NERC's *Disturbance* Analysis Working Group (DAWG). Details of its findings were discussed at the November 16–17, 1999, meeting of the *Security* Committee in Orlando, Florida. Information on the agenda and highlights of this meeting are available at the NERC Security Committee FTP site, http://www.nerc.com/~filez/scmin.html.

25. **Mechanisms for short-term power sales rely on multiple, often manual telecommunications, leading to inefficient and untimely outcomes. (Transition to Competitive Energy Service Markets)** – The short-term power market and the steps required to enact a transaction present concerns. These problems are associated with timing. The timing during which transactions can be executed presents barriers to solving problems. Typically, for hour-ahead power, the market clears no later than one-half-hour past the hour for the next hour. In the Entergy July 23 case, this meant that information on the imminent loss of White Bluff Unit 1 and the loss of an additional 300 MW of interruptible power from TVA came after this point in the hour (at around 2:30 p.m.). The rules for short-term markets left Entergy unable to acquire additional short-term power until 4:00 p.m.

26. **The generation infrastructure is aging. (Transition to Competitive Energy Service Markets)** – Entergy's average unit age is 35 years, while its newest unit currently on line is 20 years old. Currently, Entergy is in the process of adding to its generation capability through a multi-billion-dollar purchasing contract. This addition will increase Entergy's generation capability by approximately 4,800 MW, but the age of its generation capability will remain an issue for Entergy.

27. **Dispatch software problems led to inefficient utilization of limited energy resources. (Information Resources; Operations Management and Emergency Response)** – As mentioned in the description of events, SPP had a major operating-reserve-sharing software problem that resulted in the inability to "clear" reserve "markets" when the program came across situations of insufficiency. SPP has placed a temporary "patch" into SCCSWin, forcing the program to stop attempting to solve an infeasible problem. SPP's solution on July 23 was to perform a series of small transactions between territories to maintain the system economy. The number of manual transactions far outpaced what should have been done, given a theoretical "proper" operation of SCCSWin.

Section 8
Chicago: Outages on July 30 through August 12

8.1 Background

Commonwealth Edison (ComEd) is the principal utility subsidiary of its parent company, Unicom. Unicom, which employs about 16,000 people and generates $7 billion in revenues, also is parent company to Unicom Enterprises, its unregulated subsidiary. ComEd produces and then delivers electricity to more than 3.4 million customers in northern Illinois, serving approximately 8 million people (or 2.4 individuals per customer).

ComEd also sells power to wholesale customers in Illinois and in surrounding states. The company's service area covers about one-fifth of the state of Illinois, as well as 398 municipalities, including the city of Chicago. ComEd's T&D system consists of more than 1.5 million poles and towers, 500,000 transformers, 140,000 miles of electrical conductors, and 740 substations (ComEd 1999a).

The ComEd T&D system is typical of transmission and distribution in the electric industry in that it consists mainly of networked underground systems, located primarily in Chicago; overhead systems, located in urban, suburban, and rural areas; and underground residential systems, located in urban and suburban areas. These systems are fed from ComEd's T&D substations.

8.2 Event Description

In the summer of 1999, three major outages occurred in ComEd's service territory. These events, which took place from July 20 through August 12, centered around three of ComEd's substations in Chicago: Northwest substation, Lakeview substation, and Jefferson substation (Figure 7). Although the voltage levels of equipment directly affected measured as high as 69 kV, with indirect effects at the 138-kV level, the three outages clearly resulted from problems with the *distribution system.*

8.2.1 Northwest Substation

The Northwest substation is located within ComEd's high-voltage electric transmission system. Because of its location, this substation serves as an *interface* between the higher-voltage (138-kV) Chicago area transmission system and the lower-voltage distribution cable system. The latter system (consisting of 12-kV cables) appears to contain the initial failure points and is described in greater detail later in this section.

The load at the Northwest substation has grown more quickly than the city average load. Because the substation serves a primarily residential area, its summer peak load

Figure 7 Chicago: Map Showing Locations of Commonwealth Edison's Northwest, Lakeview, and Jefferson Substations

tends to occur in the late afternoon and early evening when residents return home from work.

In the two weeks preceding the first outage on Friday, July 30, 1999, the Chicago area experienced intense heat and humidity. From July 22 through July 30, ComEd recorded a new daily peak load on seven days; that is, the load on a given day exceeded the maximum load for that day, as recorded in previous years. On July 30, ComEd recorded an all-time peak demand of 21,243 MW for its northern Illinois service area, which broke the pre-1999 peak demand record of 19,212 MW set on August 14, 1995.

On July 30, a modest number of customers were without power during the working hours; however, in the late afternoon (between 4:00 and 5:00 p.m.), the number of customers affected by the outage increased and remained quite high until midnight. Figure 8 traces the severity of the outage. The restoration process that proceeded through Saturday, July 31, and Sunday, August 1, is also evident in that figure.

The events that caused the loss of power to customers served by the Northwest substation related primarily to two classes of equipment: 12-kV cables and 12- to 4-kV transformers. The basic cause appears to have been 12-kV cable faults. In cases where the cable supplied a transformer, that transformer was de-energized with the cable. In other cases, de-energizing transformers, coupled with the overall high load conditions, overloaded other transformers. The units at the Northwest substation were protected by ComEd's Transformer Overload Relief Scheme, an automated process of relay actions that remove load from a transformer operating above its rated capacity. As a result of the

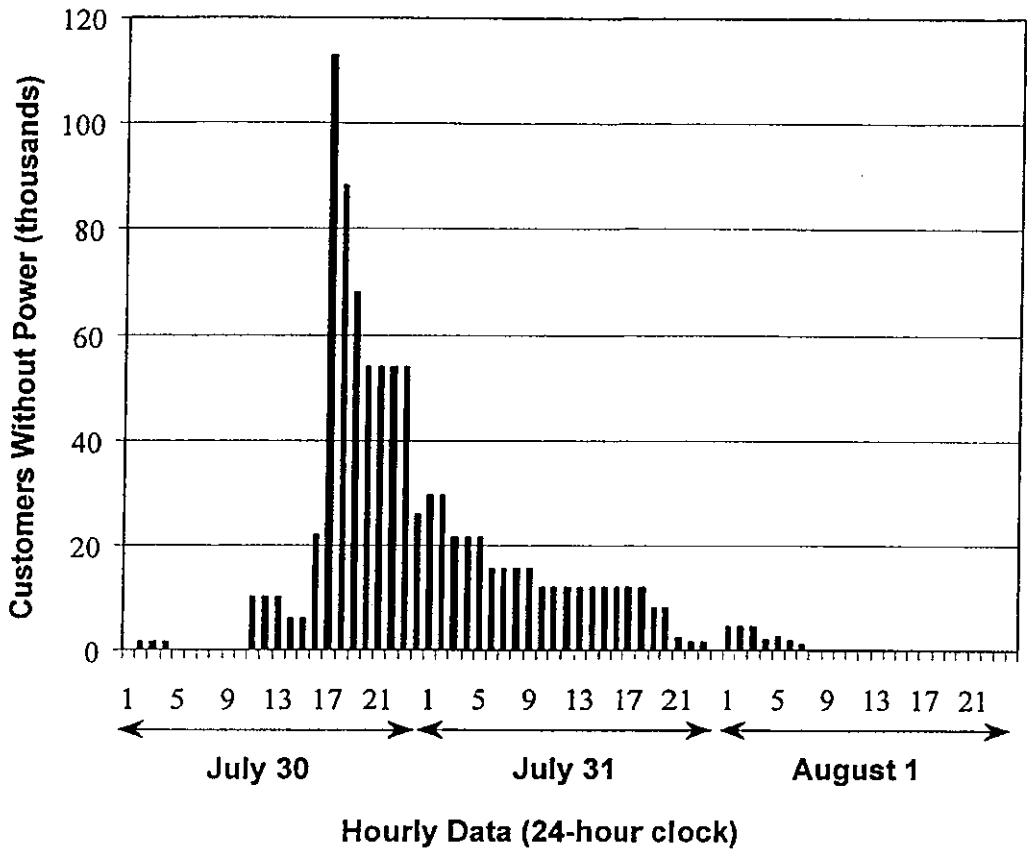

Figure 8 Chicago: Customer Outages Associated with Commonwealth Edison's Northwest Substation

high load conditions and cable faults at the Northwest substation on the afternoon of July 30, several transformers were de-energized by the automatic protection system.

A timeline for these events is provided in Figure 9. The general pattern shows initial cable faults occurring under high load conditions, transformers being removed from service, and *cascading* transformer overloads. A comparison of Figures 8 and 9 shows a close correlation between the periods when transformers were out of service and the periods when many customers were without power.

8.2.2 Lakeview Substation

ComEd's Lakeview substation serves as a point of conversion from incoming "local transmission" at 69 kV; it steps down voltage levels from 69 kV to 12 kV and 4 kV for distribution cables. The Lakeview substation has four 69- to 12-kV transformers and two 12- to 4-kV transformers. The July/August 1999 outages associated with this substation were driven by seven cable failures: five at 12-kV levels and two at 4-kV levels. These cable failures, which originated at or around the Lakeview substation, affected fewer customers than did events at the Northwest substation. However, the duration of outages

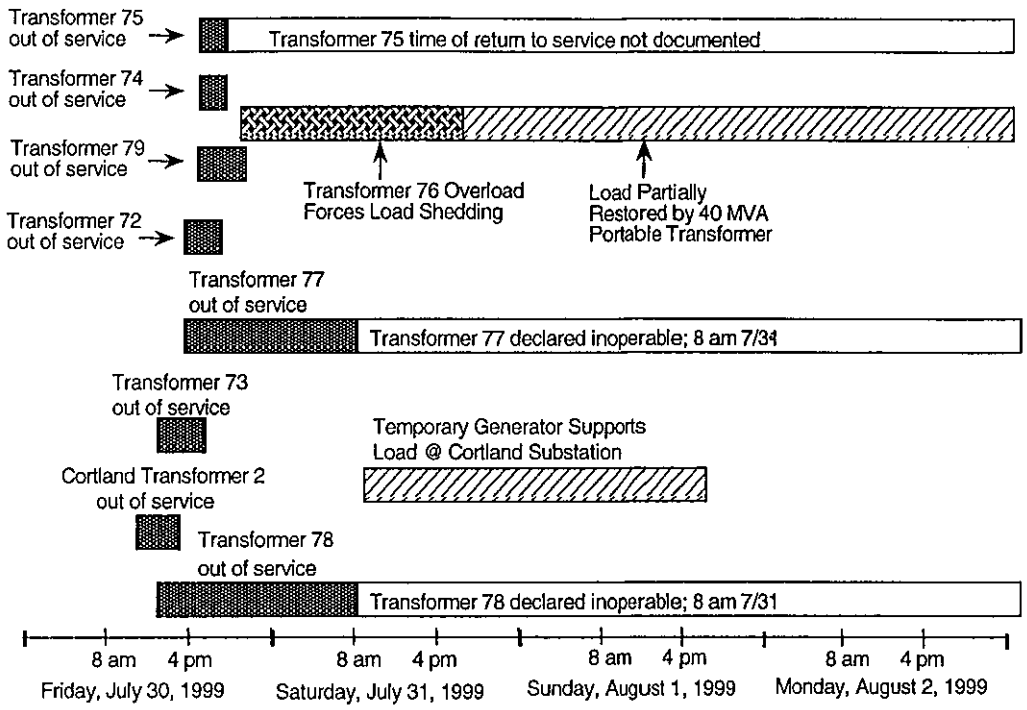

Figure 9 Chicago: Event Timeline for Commonwealth Edison's Northwest Substation

at the Lakeview substation overlapped with events that occurred at the Northwest substation. Indeed, several of the power restoration activities conducted in response to Lakeview events drew power from cables that originated from the Northwest substation, creating some direct physical coupling between the events. Two portable generators were deployed in response to these outages.

Data from ComEd indicate that about 2,400 customers in the Lakeview service area did not have power in the early hours of Friday, July 30. However, power to these customers was restored in less than two hours. Subsequent power outages on Saturday, July 31, affected as many as 10,191 customers, as multiple, simultaneous cable failures occurred.

8.2.3 Jefferson Substation

ComEd's Jefferson substation, which serves Chicago's greater downtown area (including businesses in the "Loop"), is a point of conversion from incoming transmission. It steps down voltage levels from 138 kV to 69 kV through the use of four transformer banks. Each bank is composed of three single-phase transformers, one for each phase. Each single-phase transformer has an individual rating of 67 MVA. The overall rating of a three-phase bank is 200 MVA, although ComEd documents indicate that under emergency conditions, these transformers can temporarily carry much higher load levels.

The Jefferson substation plays a critical role in the *topology* of ComEd's system. ComEd's report to the City of Chicago indicated that the Jefferson substation is the sole path of power for five substations — LaSalle, Plymouth Court, Dearborn, Ohio, and Vernon Park — and for one single-customer, dedicated substation. At these substations, the 69-kV level is further stepped down to the 12-kV level for use in a "network group." A network group supplies many 12-kV to 120-V transformers, feeding a meshed distribution grid that directly serves customers. Through this network configuration, the Jefferson substation provides service to 10,500 customers.

Several power interruptions to customers served by the Jefferson station resulted from intentional load shedding, which ComEd elected to do to try to protect overloaded equipment. The total number of customers that lost power as a result of intentional load shedding totaled less than 4,000, although this action affected many more individuals because it affected the Loop business location.

The transformer overloads and 69-kV cable failures at the root of Jefferson-related outages did not occur on a day of peak temperature and peak load, as in the case of the Northwest and Lakeview substation failures. However, symptoms of problems with the Jefferson equipment began to appear on August 4, well before the critical tripping of additional transformers that interrupted service to customers on August 11 and 12. Post-outage investigations linked several of these 69-kV cable faults to failures in the Bakelite™ joints in the cables.

The chronology of events associated with the Jefferson substation is fairly simple. The substation had four 138-kV to 69-kV transformer banks. Three of these banks went out of service, and one emergency transformer bank from the LaSalle substation temporarily came into service. The events resulted in interruptions and restorations of power to customers. Figure 10 provides a timeline of events, which are described in detail below.

At 4:19 p.m. on Wednesday, August 4, 1999, one transformer bank was removed from service because routine testing revealed evidence of overheating and arcing. The situation remained stable for one week, and the three remaining Jefferson transformer banks proved adequate to serve their load.

At 7:44 p.m. on Wednesday, August 11, a second transformer bank was automatically de-energized because of a fault on its associated 69-kV secondary cables. Inspection showed two failure points in the 69-kV cables. The substation was reduced to having only two operational transformer banks, each with a manufacturer's continuous power rating of 200 MVA. To put these ratings in perspective, consider that Jefferson substation's load had peaked earlier on this day (August 11) at 473 MVA. At 11 p.m., plans were made to shift load to the LaSalle substation so that demand would be removed from the 69-kV portion of the regional transmission system onto the 138-kV portion of the system.

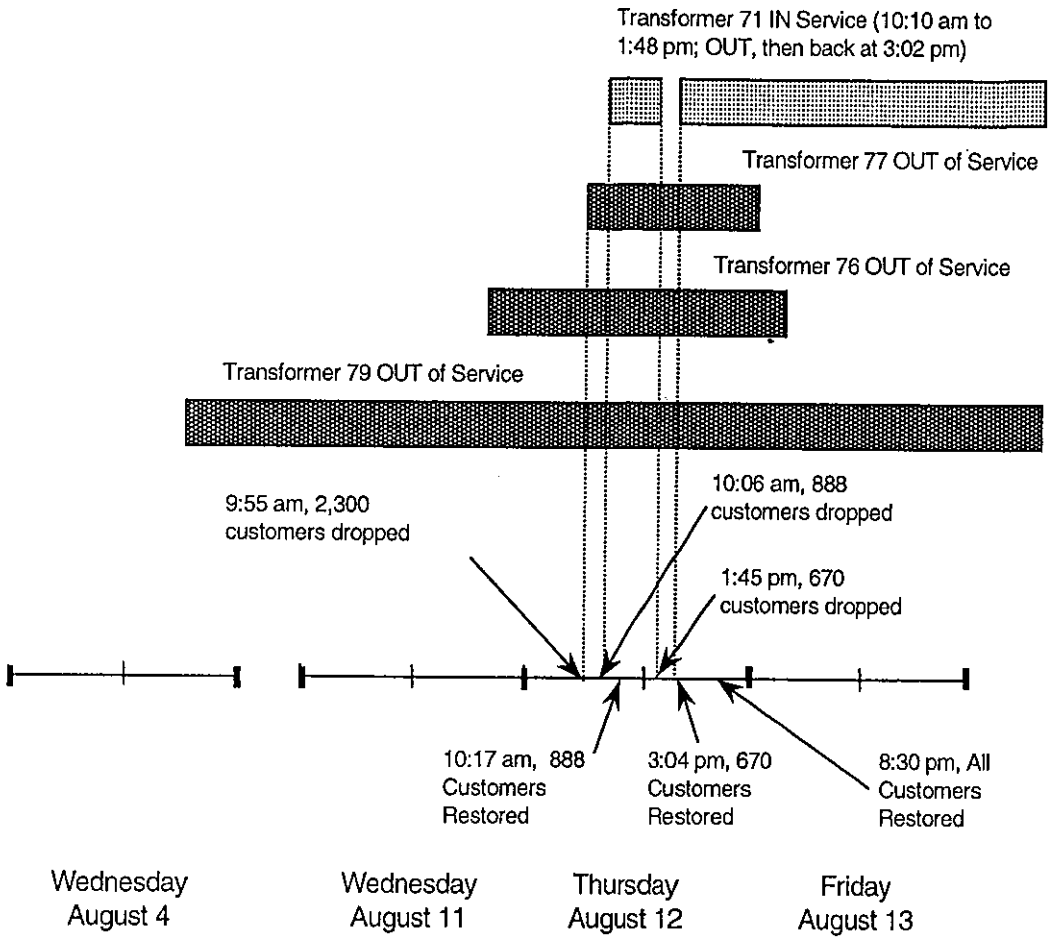

Figure 10 Chicago: Event Timeline for Commonwealth Edison's Jefferson Substation

On Thursday, August 12, at 9:39 a.m., one of the two remaining Jefferson transformer banks was automatically de-energized because of a fault on its 69-kV secondary cables. As a result, a single, 200-MVA-rated transformer was available for servicing the Jefferson load, which had reached a level of approximately 360 MVA at 9:30 a.m. To avoid overload and permanent damage to the remaining transformer bank, ComEd shut down its Vernon Park substation, which removed 2,300 customers and 55 MW of load from service at 9:55 a.m. At 10:06, additional load was intentionally shed by shutting down a section of the 12-kV distribution grid, which interrupted service to an additional 888 customers.

At 10:10, load was transferred to the LaSalle substation. This action shifted approximately 50 MVA of load off the Jefferson substation to the 138-kV system from the Taylor substation via LaSalle. As a result of this transfer, at 10:17 a.m., power was restored to the 888 customers who had lost power at 10:06 a.m. However, shortly after noon, a LaSalle transformer began to overheat. Although Chicago Fire Department personnel supplied emergency cooling water, the transformer continued to overheat.

ComEd decided to interrupt an additional 35 MVA of load, which affected service to approximately 670 customers in the south Loop. Temporarily de-energizing the LaSalle transformer allowed ComEd to adjust the cooling system. At about 1:45 p.m. on August 12, 35 MVA of load was shed. After completing adjustments to the cooling system, ComEd restored power to the 670 customers at 3:04 p.m.

At 8:30 p.m., when demand in the Loop (served by the Jefferson substation) was much lower, the remaining affected customers were reconnected, and service was restored. The largest number of customers simultaneously without service as a result of the intentional actions taken by ComEd was 3,188 (2,300 plus 888). To prepare for service interruptions in the south Loop, ComEd personnel sent warnings about potential emergency power outages; these reached many unaffected customers in the area. ComEd staff suggested that a significant number of customers that did not experience interruptions in electric power chose to suspend business operations in anticipation of possible interruptions. These actions reduced the likelihood of further overloads but magnified the social impact of the events in the south Loop area.

An examination of the Jefferson events clearly shows that the emergency situation was severe, with three transformers simultaneously out of service, and that the operating design and flexibility of the network served by this substation did not allow the response to be as flexible as needed. The reconfiguration to bring the LaSalle transformer into service was an important step toward achieving the flexible response. However, the initial shortcomings of the LaSalle transformer's cooling system suggest that for emergency response, the preparation of equipment was not up to the standards that would normally apply for bringing such a large transformer into service.

The outages in Chicago from July 30 to August 12, 1999, stimulated ComEd and other stakeholders to implement significant activity. ComEd activities fell into two categories: an assessment of the conditions at physical plants and an investigation of T&D support systems and structures. The Electric Power Research Institute (EPRI) assisted ComEd in its efforts. In addition, ABB Power T&D Company, Inc., collaborated with ComEd in T&D design studies and was awarded a contract to rebuild sections of the T&D system. The Illinois Commerce Commission and the City of Chicago also started investigations.

ComEd's investigation of its T&D organization was comprehensive and is documented in two reports (ComEd 1999b,c). These reports first consider organizational and management structures and then thoroughly review major technical areas, including the following:

- Planning and forecasting,
- Engineering and design,
- Work management and productivity,

- Maintenance (distribution and transmission),
- Operations (distribution and transmission),
- Information systems and information technology, and
- Resource optimization.

8.3 POST Findings

28. **Load forecasting techniques and associated distribution planning tools failed to adequately accommodate the effects of unusual summer weather conditions as experienced in 1999. (Reliability Metrics, Planning, and Tracking)** – Planning has been based on "average" weather conditions, meaning that load exceeds the design criterion approximately once in every 2 or 3 years (Figure 11). A criterion of 1 in 10 years is more commonplace in the industry. These shortcomings were compounded by further uncertainty in predictions for individual substation load levels. ComEd has now changed to a 99°F, four-hour moving-average peak temperature as a basis for planning.

29. **Emergency preparedness and management plans did not address distribution problems. (Operations Management and Emergency Response; Reliability Metrics, Planning, and Tracking)** – Although ComEd had an emergency plan for

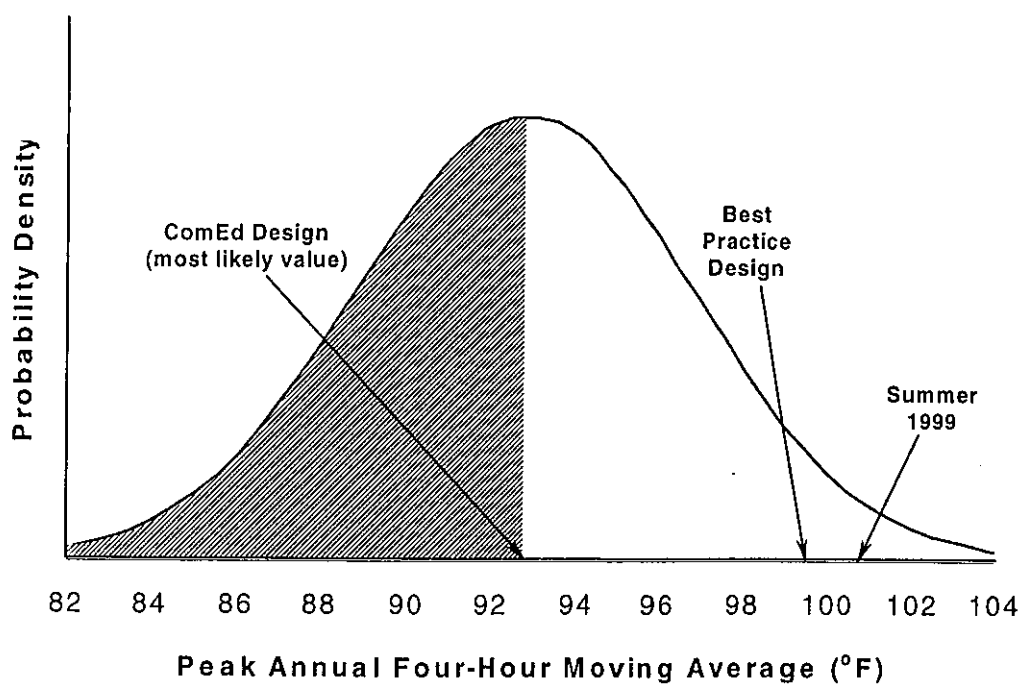

Figure 11 Chicago: Value for the Average of Extreme Weather Used by Commonwealth Edison for Forecasting

its bulk transmission and generation system, it lacked a comparable level of preparation for dealing with distribution system problems. The response plans that were in place for extreme, multiple distribution-level contingencies were inadequate. In particular:

- Detailed distribution level load relief and emergency load interruption procedures were incomplete;
- Under emergency conditions, information flows between the utility and organizations affected by outages were perceived as inadequate by these organizations; and
- ComEd's planning process has no measure (or metric) for assessing the risk of multiple contingencies.

30. **The distribution system topology is inflexible. (Reliability Metrics, Planning, and Tracking)** – The topology of the urban distribution system lacked flexibility. In particular, its ability to shift load between substations under contingency conditions was inadequate. The use of Y joints in cables made it more difficult to locate a fault and increased the effects of cable faults. Inconsistent protection philosophies tended to increase the duration of the outages.

31. **Substation protection and equipment configuration practices limited flexibility. (Operations Management and Emergency Response)** – Some substation protection and equipment configuration practices also limited flexibility in emergency response situations (which, when coupled with existing equipment protection schemes, could force removal of both a failed transformer and a working transformer paired with it).

32. **Planned distribution system upgrades were not implemented on schedule. (Regulatory Policy for Reliable Transmission and Distribution; Reliability Metrics, Planning, and Tracking)** – Distribution system upgrades in progress were not completed in time for the summer peak (e.g., an in-progress 69-kV to 138-kV substation transformer upgrade).

33. **Real-time information and historical records on distribution system conditions were limited and were not always preserved. (Information Resources)** – Less than full penetration of supervisory control and data acquisition (SCADA) system technology hindered complete monitoring of distribution system overload conditions. Each of the high-voltage substations (Northwest, Lakeview, and Jefferson) has SCADA. Most of the 4-kV portions of the distribution system that were interrupted as a result of the 12-kV cable failures do not have SCADA. Selection of SCADA data for long-term "warehousing" excluded certain key measurements, such as feeder overloads, which impeded the study of reliability trends. Also, the computer system that records alarms overloaded and lost

information that was needed to analyze the outage chronology. (This problem was corrected in the aftermath of the summer outages.)

34. **Maintenance planning did not consider transformer overload analysis. (Operations Management and Emergency Response)** – Transformer overload analysis and reporting tools were generally not coordinated with maintenance planning and programs.

35. **Substation maintenance programs did not anticipate component weaknesses. (Regulatory Policy for Reliable Transmission and Distribution; Reliability Metrics, Planning, and Tracking)** – Many fixed, periodic, substation maintenance programs had been scaled back or discontinued in transition to a "reliability-centered maintenance" philosophy. However, the collection of data and measurements necessary for successful reliability-centered maintenance was not fully in place (e.g., the dissolved gas analysis of oil-filled cables used to detect internal degradation and incipient failure began only in the aftermath of the summer outages). In general, the ability to predict possible component failures from the inspections that were performed and data that were collected was limited.

36. **Maintenance management contributed to the severity of the outages. (Regulatory Policy for Reliable Transmission and Distribution; Reliability Metrics, Planning, and Tracking)** – Management of maintenance activities was weak; tracking of inspection and maintenance processes was incomplete and poor; and employee training and skill levels were inappropriately matched to inspection duties (as documented in the case of aerial inspection of transmission conductors and insulators). A large backlog of desired corrective and preventive maintenance activities had accumulated in the year preceding the outages.

37. **Transmission and distribution maintenance expenditures declined over time and became inadequate. (Transition to Competitive Energy Service Markets; Regulatory Policy for Reliable Transmission and Distribution)** – T&D maintenance expenditures declined dramatically and consistently from 1991 to 1998 (e.g., see the annual substation maintenance expenditures shown in Figure 12). The decline coincided with other cost pressures faced by ComEd, including those associated with nuclear plant maintenance and industry restructuring.

38. **Several business factors compromised reliability performance. (Transition to Energy Service Markets; Regulatory Policy for Reliable Transmission and Distribution)** – While many individual "pieces" of reliability activity were in place (e.g., ComEd's participation in a joint EPRI-led project on reliability data mining), overall reliability performance was compromised by inadequate links between new business strategies (such as reliability-centered maintenance), resource allocation, employee training and supervision, and reliability-relevant data collection and analysis tools currently used in the field.

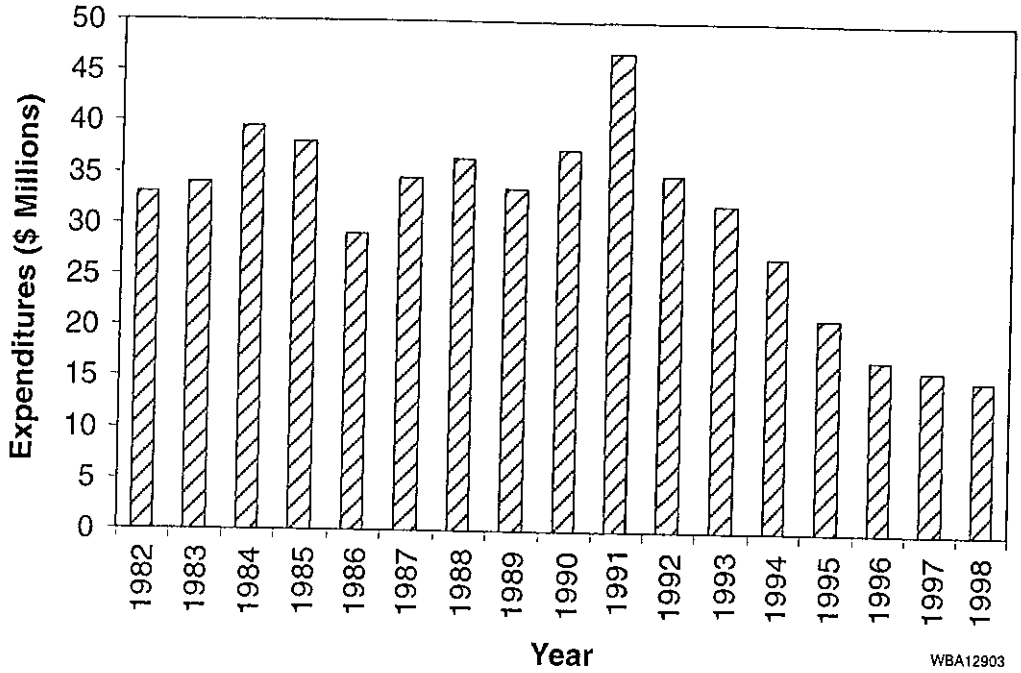

Figure 12 Chicago: Annual Substation Maintenance Expenditures for Commonwealth Edison

Section 9
Bibliography for Part 1

ComEd, 1999a, *1998 Electric Power Delivery Reliability Report,* submitted by Commonwealth Edison Company, Chicago, Ill., to Illinois Commerce Commission, Springfield, Ill., June 1.

ComEd, 1999b, *A Blueprint for Cooperation,* Implementation Report regarding the Settlement Agreement of May 15, 1999, submitted by Commonwealth Edison Company, Chicago, Ill., to City of Chicago Mayor R.M. Daley, Sept. 15.

ComEd, 1999c, *A Blueprint for Change,* Investigation Report submitted by Commonwealth Edison Company, Chicago, Ill., to Illinois Commerce Commission, Springfield, Ill., Sept. 15.

Delmarva Power & Light Company, 1999a, *Preliminary Report of Delmarva Power & Light Company Concerning the Outages on the Delmarva Peninsula and in the Northeast Portion of Harford County between July 3 and 6, 1999,* Wilmington, Del., Aug. 6.

Delmarva Power & Light Company, 1999b, *Report before the Public Service Commission of the State of Maryland in the Matter of the Investigation into the Preparedness of Maryland Utilities for Responding to Major Outages, Case No. 8826,* Wilmington, Del., summer.

Entergy Arkansas, Inc., 1999, *Report to the Arkansas Public Service Commission Regarding Firm Load Curtailment Due to Capacity Shortage on Friday, July 23, 1999,* Little Rock, Ark., Sept. 22.

Entergy Louisiana, Inc., and Entergy Gulf States, Inc., 1999, *Report to the Louisiana Public Service Commission Regarding Service Interruption to Customers on Friday, July 23, 1999,* New Orleans, La.

Entergy New Orleans, Inc., 1999, *Report to the Council of the City of New Orleans Regarding the Events of July 23, 1999,* New Orleans, La., Aug. 18.

Entergy Mississippi, Inc., 1999, *Special Report to the Mississippi Public Service Commission: An Explanation of Events prior to, during, and following Service Interruption to Entergy Mississippi Customers on Friday, July 23, 1999,* Jackson, Miss., Aug. 18.

GPU Energy, 1999a, *Red Bank Restoration Report – Overview of the Emergency at the Red Bank Substation,* GPU, Inc., Morristown, N.J., July 16.

GPU Energy, 1999b, *July 3–8, 1999 – Weather Related Electric Utility Outages,* report by GPU, Inc., Morristown, N.J., to New Jersey Board of Public Utilities, Division of Service Evaluation, July 23.

ISO-New England, 1999a, *Report on the Events of June 7 and June 8,* Holyoke, Mass., June 28.

ISO-New England, 1999b, *Internal Review of Operations, June 7–8, 1999,* Holyoke, Mass., Aug. 20.

ISO-New England, 1999c, "Status Report on ISO-New England," slides presented by ISO-New England, Holyoke, Mass., at New England Governors Conference, Oct. 5.

Louisiana Public Service Commission, 1999, *Transcript of July 28, 1999, Open Session of the Louisiana Public Service Commission*, Baton Rouge, La.

North American Electric Reliability Council, 1999, *NERC Operating Manual,* Appendix 9B, "Energy Emergency Alerts," Version 2, Draft 3 (Approved for Interim Implementation by the Security Committee), Princeton, N.J., July 13.

North American Electric Reliability Council, 1999, *1999 Summer Assessment, Reliability of Bulk Electricity Supply in North America,* Princeton, N.J., June, http://www.nerc.com/~ac/syscond.html.

Northeast Power Coordinating Council, 1999, *June 1999 Heat Wave – NPCC Final Report*, New York, N.Y., Sept. 10.

PJM Interconnection, LLC, 1999a, "Serving PJM Peak Load, July 6, 1999, Highlights," slides presented by PJM, Norristown, Penn.

PJM Interconnection, LLC, 1999b, "Record Electricity Load Events for 1999 Summer, Highlights," slides presented by PJM, Norristown, Penn., Oct. 4.

PJM Interconnection, LLC, 1999c, additional information about July 6, 1999, in letter from PJM, Norristown, Penn., to PJM Members Committee, July 26.

PJM Interconnection, LLC, 1999d, "Addressing Bulk Power Low Voltage," letter from PJM, Norristown, Penn., to PJM Members Committee, July 21.

PJM Interconnection, LLC, 1999e, slides presented by PJM, Norristown, Penn., to Transmission and Resource Adequacy Panel at Northeast Power Coordinating Council General Meeting, Sept. 23.

PJM Interconnection, LLC, 1999f, slides presented by PJM, Norristown, Penn., to Market Developments Panel at Northeast Power Coordinating Council General Meeting, Sept. 24.

Public Service Electric and Gas Company, 1999a, *Incident Report, Englewood Substation, Hudson Terrace Substation, CitiBank Substation, 26-kV Loop, Bergen County,* Newark, N.J.

Public Service Electric and Gas Company, 1999b, *City Dock Substation Shutdown,* Newark, N.J.

Public Utility Commission of Texas, 1999, *Responses of Entergy Gulf States, Inc., to Questions Concerning Entergy Outages of July 23, 1999,* document related to Project No. 21212 (Investigation into the Operation of Entergy Related to the Generation and Purchases of Power for its Customers), Beaumont, Texas.

Part 2: Stakeholder Workshops — Sessions on POST Findings

Part 2 of this Interim Report categorizes the POST findings into five topical areas to facilitate discussion at three stakeholder workshops. The San Francisco and New Orleans workshops will have both morning and afternoon sessions, and the Newark workshop will have only a morning session. Each session will focus on one primary topic. However, there will be an opportunity for stakeholders and observers to address any of the other topics at each workshop session. The workshop locations and primary topics are as follows:

- January 20, 2000: San Francisco, California
  - Topic 1: Transition to Competitive Energy Service Markets (morning session)
  - Topic 2: Regulatory Policy for Reliable Transmission and Distribution (afternoon session)

- January 25, 2000: New Orleans, Louisiana
  - Topic 3: Information Resources (morning session)
  - Topic 4: Operations Management and Emergency Response (afternoon session)

- January 27, 2000: Newark, New Jersey
  - Topic 5: Reliability Metrics, Planning, and Tracking (morning session)

At the workshops, stakeholders will have the opportunity to suggest federal government actions that could help avoid electric power outages in the future. Stakeholders can register for the workshop sessions by filling out and mailing the form in Appendix B or through the POST Web site at http://tis.eh.doe.gov/post/.

To provide a focus for the discussions at the workshop sessions, a brief synopsis of each topic is provided here. The synopsis is followed by a list of the findings from the POST investigations that fall under the topic. Because some findings are relevant to two topics, they are listed under two workshop sessions.

Section 10
San Francisco, California, Workshop

10.1 Morning Session: Topic 1, Transition to Competitive Energy Service Markets

10.1.1 Synopsis

Parts of the utility industry are changing from a regulated to a competitive model. The responsibility for reliable energy services is moving from the utilities to the markets. The markets will not be solely responsible for reliability, but they will have a significant role. *Adequacy* of energy services is a major component of reliability. The markets can play a key role in ensuring adequacy by providing elasticity of demand, allowing loads to sell *ancillary services*, and providing incentives for generation development.

All successful markets have *demand elasticity*. Such demand elasticity is very important in the electricity market, because electricity cannot easily be stored, and when demand increases, generation must increase in the same proportion. However, at present, the U.S. electricity market has very limited demand elasticity because consumers rarely see the significant price swings that occur in the hourly rate for electricity on the wholesale market. Consumers buy electricity at a fixed rate, or perhaps with a simple demand charge or other fixed "on peak" charge. A lack of incentives for customers to reduce their use of power during times of shortage results in emergency calls for conservation. Moreover, in extreme cases, generation supplies become inadequate to serve load. Consumers are not responsive to price swings because they see only the average price. Consequently, at present, when prices rise to high levels, there is no corresponding reduction in consumption.

Another reliability issue is that the market rules are still evolving, and market participants have not gotten much experience during times of system emergencies. This limited experience hinders the ability of operators to respond effectively and quickly to emergencies.

As the electricity supply becomes scarce, wholesale prices rise. If only a small percentage of consumers responded to price swings and reduced their consumption when prices became too high, a change in generation adequacy would result. Another option in response to short-term high prices might be for loads to sell contingency reserves to the power system as a reliability service. This option could free generating capacity being held in reserve and allow it to produce energy and serve load.

10.1.2 Eleven Relevant POST Findings[9]

1. Electricity suppliers respond to market signals, but there is a lag of several years before new generation resources can be placed into service. (New England)

2. Retail customers have limited mechanisms and incentives to conserve energy or resort to alternatives during electricity shortages. (New England) (Same as Finding 19)

3. Market rules for system operation during times of system emergencies have not been fully developed or agreed upon by market participants. (New England)

4. Some independent system operators were lacking the needed authority to arrange energy transfers during emergency conditions. (New England)

12. There may not be adequate incentives for reactive power production. (Mid-Atlantic)

19. Retail customers have limited mechanisms and incentives to conserve energy or resort to alternatives during electricity shortages. (Delmarva) (Same as Finding 2)

20. Notice requirements in load management contracts do not permit an efficient response to emergencies. (Delmarva)

25. Mechanisms for short-term power sales rely on multiple, often manual telecommunications, leading to inefficient and untimely outcomes. (South-Central States)

26. The generation infrastructure is aging. (South-Central States)

37. Transmission and distribution maintenance expenditures declined over time and became inadequate. (Chicago)

38. Several business factors compromised reliability performance. (Chicago)

10.2 Afternoon Session: Topic 2, Regulatory Policy for Reliable Transmission and Distribution

10.2.1 Synopsis

Reliable electricity is essential for our nation's economic prosperity, social well being, and security. We have developed an economy and a culture that are based on the assumption that electricity will always be available (e.g., for computers and traffic control systems). Although electricity is increasingly being viewed as a commodity, the

[9] The numbers of the findings in Sections 10, 11, and 12 are those used in Table S.1 and throughout Part 1.

reliability of the electricity delivery (T&D) system has characteristics of a public good;[10] that is, a highly reliable electricity delivery system benefits all consumers of electricity. Furthermore, while a customer's willingness to pay for generation reliability can be matched directly with the incremental cost of providing additional capacity, the reliability derived by an enhanced T&D system is shared by many customers, so individuals may be tempted to get a "free ride" on any improvement. Therefore, electricity delivery companies do not have the proper incentive to provide the appropriate level of reliability, partly because they are not fully liable for losses associated with outages and also because the signals they receive from their customers are subject to those "free ride" problems.

The nation's electric utilities are in the midst of a transition to competitive generation companies and regulated electricity delivery companies. Some electric companies have shifted their priority from the historic "quality of service" to "competitive pricing." Old and new companies in a restructured electric industry will use the T&D grid for a much larger quantity and variety of transactions than they did before. The desire to operate this system closer to its limits increases the importance of actions needed to maintain a reliable electricity delivery system, including making timely investments, performing maintenance, developing new technologies, enhancing modeling and analysis tools, and installing system additions. One concern is whether the existing regulatory policy package, which consists of regulatory standards and incentives, will motivate electricity delivery companies to provide an appropriate level of reliability. In other words, is the structure of the regulatory policy package adequate in light of the new demands on electricity delivery companies? Additional regulatory measures and increased incentives, including performance-based standards, may be required to assure that the necessary actions are taken to provide the proper level of reliability. The regulatory policy package must consider both the public interest and the business (market) aspect of the delivery of electricity.

10.2.2 Nine Relevant POST Findings

10. Traditional methods (e.g., construction of new transmission and central generation) for supplying electric power to load pockets were not able to keep up with load growth. (Long Island)

12. There may not be adequate incentives for reactive power production. (Mid-Atlantic)

15. Mechanisms for sharing information on maintenance best practices and equipment performance among distribution utilities were inadequate. (New Jersey)

[10] A good is a public good if people cannot be excluded from consuming it and if one person's consumption does not reduce the amount available to other consumers. Examples of public goods in a specific neighborhood include street lighting, police and fire protection, highways, and clean air. Benefit-cost analysis is the methodology traditionally used to evaluate the appropriate level of investment in public goods.

16. Utilities may experience lengthy delays in replacing failed critical equipment. (New Jersey)

32. Planned distribution system upgrades were not implemented on schedule. (Chicago)

35. Substation maintenance programs did not anticipate component weaknesses. (Chicago)

36. Maintenance management contributed to the severity of the outages. (Chicago)

37. Transmission and distribution maintenance expenditures declined over time and became inadequate. (Chicago)

38. Several business factors compromised reliability performance. (Chicago)

Section 11
New Orleans, Louisiana, Workshop

11.1 Morning Session: Topic 3, Information Resources

11.1.1 Synopsis

Energy analysts have long forecast a future intelligent energy system, in which more intelligent planning, design, control, and operation of system assets will be a primary tool for meeting energy demands. Implicit in this vision is a considerably enhanced information infrastructure, defined broadly to include human resources and collaborative procedures. The electric service failures of recent years have repeatedly demonstrated that a higher degree of system intelligence, while valuable for assets management, is also necessary for maintaining and enhancing system reliability. Better information, in its many forms and time frames, is a critical requirement for all paths toward a better power system.

- **Predictive Information.** Poor predictive information has become a problem of strategic proportions. Too often, system operators have been confronted by operating conditions that planners did not anticipate or by system behavior that planning models did not indicate for the conditions at hand. Poor understanding of actual system behavior readily leads to poor investment decisions, improper settings for control devices, and inappropriate instructions to system operators. Improved technology and practices could reduce planning uncertainties and deal better with those uncertainties that cannot be eliminated.

- **Real-Time Information.** If they are provided with sufficient real-time information, system operators can usually deal with system emergencies that develop slowly enough for manual countermeasures to be effective. Technologies for acquiring the needed data are readily available, and they are being deployed at many control centers. Means for translating such data into useful information, and for timely routing of that information, are available but not mature. The actual deployment of such resources is far less a matter of technology development than of justifying the monetary investments and overcoming proprietary concerns about data sharing among utilities.

- **Archival Information.** Good archival information is needed to understand the outages that do occur and to avoid their recurrence. It can also be necessary for returning affected facilities to service or for adjusting the operational ratings of such facilities. Collecting the data is not technologically difficult or even very expensive. Despite this fact, overall operating records for major outages tend to be incomplete, and data quality tends to be mediocre.

Resolving these information needs is less a matter of technology development than of "value engineering" the overall information infrastructure and of dealing with institutional barriers.

11.1.2 Nine Relevant POST Findings

5. Cable condition is not accurately assessed by conventional diagnostics and practices, which may accelerate cable failure. (New York City)

6. Real-time data on cable temperature are not available. (New York City)

8. Load predictions have been inadequate. (Long Island)

11. Unit ratings were not consistent with operating performance during periods of high loads. (Mid-Atlantic)

13. Planning tools did not predict significant voltage degradation during periods of high loads. (Mid-Atlantic)

14. There are no reliable tests for identifying incipient failures in feeder cables. (New Jersey)

22. Summer ratings and actual capability of generating units are not always consistent. (South-Central States)

27. Dispatch software problems led to inefficient utilization of limited energy resources (South-Central States)

33. Real-time information and historical records on distribution system conditions were limited and were not always preserved. (Chicago)

11.2 Afternoon Session: Topic 4, Operations Management and Emergency Response

11.2.1 Synopsis

The demands on and uncertainties faced by system operators have increased significantly. When the interconnected electric grid was developed through the connection of vertically integrated, regulated monopolies, power transactions were relatively few, and the distances involved were small. The number of bulk power transactions has increased at an exceptional rate. The number of players (new power brokers and producers, as well as formerly integrated, now divided, utilities) has increased as well. The distances involved in these transactions cross many control areas, while the physics of transporting power involve control areas that are well beyond the contract path involved. At the same time, competitive portions of the overall market seek to achieve a balance between reliability and short-term profitability. Tariffs, maintenance schedules, and equipment/system design can also serve as limiting factors. Each of these changes to the system increases not only the overall system complexity but also the uncertainty involved in planning and operations, especially with regard to training for and dealing with emergency response situations. An increasing number of combinations of contingencies in the system as a whole, especially those previously outside the scope

of a particular system operator, can have an impact on the system in question. If these events were better understood during planning, and if system operators were provided with guidance through prepared methodologies, some of the burden would be taken off their shoulders, especially during emergencies. Protocols for quickly notifying the proper authorities in the event of a potential system emergency woulod most likely help prevent small emergencies from becoming much larger.

The key role for operations planners in this developing environment is to find the critical balance between maintaining reliability and meeting a larger number of system needs. The availability of an array of system planning tools, the use of increasing quantities of information (much of it considered market sensitive), the development of mitigation strategies to quickly deal with a variety of current and potential system events, and the preparedness to implement these strategies are essential for maintaining a reliable electricity industry in the evolving competitive marketplace.

11.2.2 Nine Relevant POST Findings

13. Planning tools did not predict significant voltage degradation during periods of high loads. (Mid-Atlantic)

18. Summer ratings for electric generating units were calculated for normal summer temperatures and were not consistent with performance during periods of unusually high temperatures. (Delmarva)

20. Notice requirements in load management contracts do not permit an efficient response to emergencies. (Delmarva)

23. Problems in anticipation and delays in the application of public appeals limited the effectiveness of the appeals once they were made. (South-Central States)

24. Reliance on nonfirm purchases to meet operating reserve targets results in inadequate reserves during regionwide events of high demand. (South-Central States)

27. Dispatch software problems led to inefficient utilization of limited energy resources. (South-Central States)

29. Emergency preparedness and management plans did not address distribution problems. (Chicago)

31. Substation protection and equipment configuration practices limited flexibility. (Chicago)

34. Maintenance planning did not consider transformer overload analysis. (Chicago)

Section 12
Newark, New Jersey, Workshop

12.1 Morning Session: Topic 5, Reliability Metrics, Planning, and Tracking

12.1.1 Synopsis

Unlike other technology products, electricity must be delivered and consumed as fast as it is produced; electricity has zero shelf life. Any serious break in the infrastructure chain from raw fuel to final consumption results in a service interruption. That infrastructure must be developed well in advance of actual need, and it must contain reserve capacity as insurance against unusual circumstances. The core issues in power system reliability are how society will decide what level of insurance is enough, and how that insurance can best be obtained. Although these issues have never been simple, they have been complicated even more by the emerging trade in open markets for a commodity (electricity) that, for technical reasons, might not be deliverable at call. The electricity industry is now at a point where even the strategies for day-ahead energy purchases can critically affect the reliability of services to thousands of customers.

A large power system can fail in many different ways, and with many different consequences. Thus the concepts and definitions associated with power system reliability are very broad. Industry metrics for service failures tend to consider just immediate consequences, such as forced outage rates, lost revenue, or the number of affected customers. It should be recognized, though, that service failures are just partial indicators of system reliability. Large-scale failures are too rare and too complex for direct statistical data to be meaningful. The ability of the system to avert or promptly recover from such failures — and the means for doing so — must be determined through analyses of the root causes of such events as they occur, augmented by predictive reliability models.

Reliability at all levels is usually the cumulative result of decisions that were made over the span of many years, often for an assumed future that did not come to pass. Better planning decisions, whether they are in the area of capacity investments or coordination of protective relays, are the key to better reliability. Technology can provide better tools for making decisions. However, these tools cannot provide the answer to the question of how electric system reliability links to human health and safety or to the economy at large.

12.2.2 Eighteen Relevant POST Findings

5. Cable condition is not accurately assessed by conventional diagnostics and practices, which may accelerate cable failure. (New York City)

7. The harsh environment in which cables are located contributes to reliability problems. (New York City)

8. Load predictions have been inadequate. (Long Island)

9. Transformer failure and associated interconnection problems can require lengthy equipment repair times. (Long Island)

11. Unit ratings were not consistent with operating performance during periods of high loads. (Mid-Atlantic)

14. There are no reliable tests for identifying incipient failures in feeder cables. (New Jersey)

15. Mechanisms for sharing information on maintenance best practices and equipment performance among distribution utilities were inadequate. (New Jersey)

16. Utilities may experience lengthy delays in replacing failed critical equipment. (New Jersey)

17. Forecasting methods used by system planners did not accurately predict peak summer loads. (Delmarva)

21. Reliability criteria for generation reserves were not sufficient to avoid regular power shortfalls. (Delmarva)

22. Summer ratings and actual capability of generating units are not always consistent. (South-Central States)

24. Reliance on nonfirm purchases to meet operating reserve targets results in inadequate reserves during regionwide events of high demand. (South-Central States)

28. Load forecasting techniques and associated distribution planning tools failed to adequately accommodate the effects of unusual summer weather conditions experienced in 1999. (Chicago)

29. Emergency preparedness and management plans did not address distribution problems. (Chicago)

30. The distribution system topology is inflexible. (Chicago)

32. Planned distribution system upgrades were not implemented on schedule. (Chicago)

35. Substation maintenance programs did not anticipate component weaknesses. (Chicago)

36. Maintenance management contributed to the severity of the outages. (Chicago)

Appendix A: POST Study of Power Flow in the Delmarva Peninsula

The Power Outage Study Team (POST) conducted preliminary power flow studies in order to better understand the Delmarva Power & Light Company (DPL) system events that took place on July 6. The key issue was whether the outage of the Indian River 2 generator (IR2) at 10:35 a.m. threatened voltage collapse across the Delmarva (Delaware-Maryland-Virginia) Peninsula. The starting point for this work was a power flow case, supplied by DPL, that approximated the system conditions immediately before the outage of IR2. Initially the case had a total DPL load of about 3,300 megawatts (MW). All of the DPL generation was on line except Indian River 3, Edgemoor 3, and two other small generators in the Newcastle region. The load power factors had been set rather low, as would be expected for a day with a heavy air conditioning load. The only changes made to this case by POST were to (1) scale the load back slightly to 3,200 MW, for a better match to the load profile of 10:35 a.m., and (2) set the generator power outputs (in megawatts) to the maximum values indicated in the preliminary report of the Delware Public Service Commission.

With IR2 in service, producing 77 MW and 20 megavolts-ampere-reactive (MVAR), the voltage profile across the Delmarva Peninsula was relatively good. The lowest 69-kilovolt (kV) voltage was 0.962 per unit at the Lewes substation (which is located close to Delaware Bay, north of the Indian River plant). Of approximately 150 69-kV buses, only six had voltages below 0.97 per unit, while 25 had voltages below 0.98 per unit.

Next the power flow was recalculated for the IR2 unit out of service. This step dramatically changed the voltage profile across most of the Delmarva Peninsula. The lowest 69-kV voltage was now just 0.91 per unit (again at Lewes). Eight 69-kV voltages were below 0.93 per unit, and 40 were below 0.95 per unit. Overall, the voltages at 56 buses modeled in the case were below 0.95 per unit, which is the DPL threshold for low-voltage alarms. These results correspond rather closely with DPL's report that within one minute of the loss of IR2, its energy management system (EMS) indicated 85 low-voltage alarms. (One must take into account that a single bus in the power flow might correspond to multiple alarm points in an EMS, and that the EMS might also observe individual lower-voltage buses that have been aggregated in the power flow model.) Color contours of the 69-kV voltages for the power flows when IR2 is in service and out of service are shown on the cover of this report. Comparing them indicates that the outage of the relatively small IR2 unit could have had a significant and widespread impact on voltages across the Delmarva Peninsula.

Such high sensitivity of bus voltages to real and reactive power generation is often associated with a system that is operating near its point of maximum loadability. This aspect of system performance can be represented through a power voltage (PV) curve, which shows the variation in bus voltage magnitudes with respect to bus or system load.

Figure A.1 shows the curves for 69-kV voltage at the Lewes substation when IR2 was in service and out of service. These curves were developed by solving multiple power flows for each situation and then plotting the Lewes substation 69-kV voltage. Note that when IR2 is out of service, the system operating point of 3,200 MW is very close to the point of maximum loadability, when voltages could collapse toward zero, and emergency actions would be needed to avoid catastrophic failure.

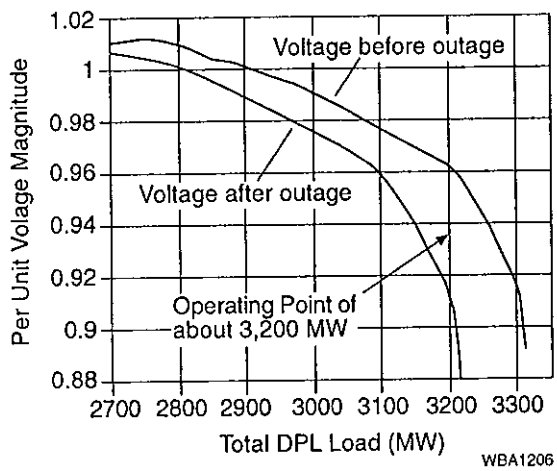

Figure A.1 Delmarva Peninsula: Power Voltage Curves for Delmarva Power & Light Company's Lewes Substation 69-kV Voltage before and after the Indian River 2 Generator Outage

Appendix B: Typical Workshop Agenda and Registration Form

Typical Workshop Agenda

Session 1: First Primary Topic

8:30 Purpose and Introductions

8:45 Stakeholder Statements on First Primary Topic
(5 minutes each or as time allows)

9:45 Break

10:00 Discussion of First Primary Topic

11:00 Stakeholder Statements on Other Topics
(5 minutes each or as time allows)

11:30 Observer Statements (those not registered)
(3 minutes each or as time allows)

12:00 Closing Remarks for Session 1

12:15 Break for Lunch (on your own)

Session 2: Second Primary Topic

1:30 Purpose and Introductions

1:45 Stakeholder Statements on Second Primary Topic
(5 minutes each or as time allows)

2:45 Break

3:00 Discussion of Second Primary Topic

4:00 Stakeholder Statements on Other Topics
(5 minutes each or as time allows)

4:30 Observer Statements
(3 minutes each or as time allows)

5:00 Closing Remarks for Session 2

POST Workshop Registration Form

The DOE Power Outage Study Team (POST) categorized its findings into five topical areas to facilitate discussion at three stakeholder workshops. Although there will be an opportunity to address any of the five topics at each workshop session, each session will focus on only one primary topic.

Because of the limited amount of time each participant has to comment, we encourage you to bring 15 copies of your written comments or submit your comments electronically to the POST Web site:

http://tis.eh.doe.gov/post/

You can register for the workshops via the Internet Web site above or by mailing this form to:

Paul Carrier, PO-21
U.S. Department of Energy
1000 Independence Ave., SW
Washington, DC 20585

If you have questions or need to cancel your registration, please call Regina Griego at (202) 586-6535.

We thank you in advance for your participation in the workshops.

First Name _____ Last Name _____

Organization _____

Address _____

_____

Phone _____ Fax _____ E-mail _____

Please check the appropriate box(es) to indicate the workshop session(s) you plan to attend:

January 20, 2000
San Francisco, California

- ❑ Transition to Competitive Energy Service Markets (morning session)
- ❑ Regulatory Policy for Reliable Transmission and Distribution (afternoon session)

January 25, 2000
New Orleans, Louisiana

- ❑ Information Resources (morning session)
- ❑ Operations Management and Emergency Response (afternoon session)

January 27, 2000
Newark, New Jersey

- ❑ Reliability Metrics, Planning, and Tracking (morning session)

There are no fees for these workshops. Hotel and travel arrangements are the responsibility of the participant.

Appendix C: Glossary

This glossary provides definitions of some of the terms listed in the Notation list as well as many others used throughout the report and some others that are related to the field but not expressly mentioned. In the text of this report, terms that are defined in the glossary appear in italics the first time they are used.

Adequacy — Ability of the electric system to supply the aggregate electrical demand and energy requirements of customers at all times, taking into account scheduled and reasonably expected unscheduled outages of system elements.

Ancillary Services — Interconnected Operations Services identified by the U.S. Federal Energy Regulatory Commission (Order No. 888 issued April 24, 1996) as necessary to effect a transfer of electricity between purchasing and selling entities and which a transmission provider must include in an open-access transmission tariff. See also Interconnected Operations Services.

Apparent Power — Product of the volts and amperes. It comprises both *real* and *reactive* power, usually expressed in kilovolt-amperes (kVA) or megavolt-amperes (MVA).

Automatic Generation Control (AGC) — Equipment that automatically adjusts a control area's generation to maintain its interchange schedule plus its share of frequency regulation.

Availability — Measure of time that a generating unit, transmission line, or other facility is capable of providing service, whether or not it actually is in service. Typically, this measure is expressed as a percent available for the period under consideration.

Bulk Power System — The portion of an electric power system that encompasses the generation resources, system control, and high-voltage transmission system.

Capability — see Installed Capability and Operable Capability.

Capacity — The rated continuous load-carrying ability, expressed in megawatts (MW), megavolt-amperes (MVA), or megavolt-amperes-reactive (MVAR) of generation, transmission, or other electrical equipment.

Cascading — Uncontrolled successive loss of system elements triggered by an incident at any location. Cascading results in widespread service interruption, which cannot be restrained from sequentially spreading beyond an area predetermined by appropriate studies.

Clearing Price — see Energy Clearing Price.

Contingency — Unexpected failure or outage of a system component, such as a generator, transmission line, circuit breaker, switch, or other electrical element. A contingency also may include multiple components, which are related by situations leading to simultaneous component outages.

Contract Path — Specific contiguous electrical path from a point of receipt to a point of delivery for which transfer rights have been contracted.

Control Area — Electric system or systems, bounded by interconnection metering and telemetry, capable of controlling generation to maintain its interchange schedule with other control areas and contributing to frequency regulation of the interconnection.

Current Limiter — Device that, when added to an electric system, is designed to limit damaging levels of current in the system. In the Consolidated Edison distribution system, current limiters (in the form of fusible links) are used to protect low-voltage conductors in the underground distribution system.

Curtailment — Reduction in the scheduled capacity or energy delivery.

Demand Elasticity — Measure of how the quantity of a good (e.g., electricity) demanded responds to a change in its price.

Demand-Side Management — Programs that affect customer use of electricity, both the timing (sometimes referred to as load management) and the amount (sometimes referred to as energy efficiency).

Dispatch — Operating control of an integrated electric system involving operations such as assignment of levels of output to specific generating stations and other sources of supply; control of transmission lines, substations, and equipment; operation of principal interties and switching; and scheduling of energy transactions.

Distribution Network — A network of electrical lines from a substation (which is the terminus of the transmission network) to a series of transformers (and eventually to the ultimate customer).

Distribution System — Portion of an electric system that "transports" electricity from the bulk-power system to retail customers, consisting primarily of low-voltage lines and transformers.

Disturbance — Unplanned event that produces an abnormal system condition.

Electrical Energy — The generation or use of electric power by a device over a period of time, expressed in kilowatt-hour (kWh), megawatt-hour (MWh), or gigawatt-hour (GWh).

Electric System or Electric Power System — An interconnected combination of generation, transmission, and distribution components that make up an electric utility, an electric utility and one or more independent power producers (IPPs), or group of utilities and one or more IPPs.

Electric Utility — Corporation, person, agency, authority, or other legal entity or instrumentality that owns or operates facilities for the generation, transmission, distribution, or sale of electric energy primarily for use by the public and is defined as a utility under the statutes and rules by which it is regulated. An electric utility can be investor-owned, cooperatively owned, or government-owned (owned by a federal agency, crown corporation, state, provincial government, municipal government, and public power district).

Emergency — Any abnormal system condition that requires automatic or immediate manual action to prevent or limit loss of transmission facilities or generation supply that could adversely affect the reliability of the electric system.

Energy Clearing Price — The price at which the market is able to match the last unit of energy a specific seller is willing to sell with the last unit of energy a specific purchaser is willing to buy.

Federal Energy Regulatory Commission (FERC) — Independent federal agency within the U.S. Department of Energy that, among other responsibilities, regulates the transmission and wholesale sales of electricity in interstate commerce.

Firm Power or Purchase — Power or power-producing capacity intended to be available at all times during the period covered by a guaranteed commitment to deliver, even under adverse conditions.

Forced Outage — Removal from service availability of a generating unit, transmission line, or other facility for emergency reasons or a condition in which the equipment is unavailable because of unanticipated failure.

Frequency — Rate, in cycles per second (or Hertz, Hz), at which voltage and current oscillate in electric power systems. The reference frequency in North American Interconnections is 60 Hz.

Generating Reserve — see Reserve.

Generating Unit — An electric generator together with its prime mover (e.g., steam from boiler).

Grid — System of interconnected power lines and generators that is managed so that the generators are dispatched as needed to meet the requirements of the customers connected to the grid at various points. Gridco is sometimes used to identify an independent company responsible for the operation of the grid.

Independent System Operator (ISO) — A neutral operator responsible for maintaining the generation-load balance of the system in real time. The ISO performs its function by monitoring and controlling the transmission system and some generating units to ensure that generation matches loads.

Installed Capability — Seasonal (i.e., winter and summer) maximum load-carrying ability of a generating unit, excluding capacity required for station use.

Interconnected Operations Services (IOS) — Services that transmission providers may offer voluntarily to a transmission customer under Federal Energy Regulatory Commission Order No. 888 in addition to ancillary services.

Interconnection — When capitalized, any one of the major electric system networks in North America. When not capitalized, the facilities that connect two systems or control areas. In addition, an interconnection refers to the facilities that connect a nonutility generator to a control area or system.

Interface — Specific set of transmission elements between two areas or between two areas that make up one or more electric systems.

Interruptible Rate — Electricity rate that, in accordance with contractual arrangements, allows interruption of consumer load by direct control of the utility system operator or by action of the consumer at the direct request of the system operator. It usually involves commercial and industrial consumers. In some instances, the load reduction may be affected by direct action of the system operator (remote tripping) after notice to the consumer in accordance with contractual provisions.

Load — A consumer of electric energy; also the amount of power (sometimes called demand) consumed by a utility system, individual customer, or electrical device.

Load Pocket — Geographical area in which electricity demand sometimes exceeds local generation capability and in which there is an electricity import limitation as a result of transmission constraints.

Load Shedding — The process of deliberately removing (either manually or automatically) preselected customer demand from a power system in response to an abnormal condition in order to maintain the integrity of the system and minimize overall customer outages.

Market Clearing Price of Electricity — see Energy Clearing Price.

Marketers — Commercial entities that buy and sell electricity.

Must-Run Resources — Generation designated to operate at a specific level and not available for dispatch.

Network Distribution — Method of distributing electric power to a densely populated area, where a network or grid of low-voltage conductors covers an area of several city blocks to a few square miles. The grid is solidly connected and is fed from multiple distribution feeders.

Nonfirm Power or Purchase — Power or power-producing capacity supplied or available under a commitment having limited or no assured availability.

Nonspinning Reserve — Generation capacity that is not being utilized but that can be activated and used to provide assistance with little notification.

North American Electric Reliability Council (NERC) — A not-for-profit company formed by the electric utility industry in 1968 to promote the reliability of the electricity supply in North America. NERC consists of 10 Regional Reliability Councils and one Affiliate whose members account for virtually all the electricity supplied in the United States, Canada, and a portion of Baja California Norte, Mexico. The members of these Councils are from all segments of the electricity supply industry — investor-owned, federal, rural electric cooperative, state/municipal, and provincial utilities, independent power producers, and power marketers. The 10 NERC Regional Reliability Councils are East Central Area Reliability Coordination Agreement (ECAR), Electric Reliability Council of Texas (ERCOT), Florida Reliability Coordinating Council (FRCC), Mid-Atlantic Area Council (MAAC), Mid-America Interconnected Network (MAIN), Mid-Continent Area Power Pool (MAPP), Northeast Power Coordinating Council (NPCC), Southeastern Electric Reliability Council (SERC), Southwest Power Pool (SPP), and Western Systems Coordinating Council (WSCC). The Affiliate is the Alaskan Systems Coordination Council (ASCC).

Open-Access Same-Time Information System (OASIS) — An electronic posting system for transmission access data that allows all transmission customers to view the data simultaneously.

Operable Capability — The portion of installed capability of a generating unit that is in operation or available to operate in the hour.

Operating Reserve — That capability above firm system demand required to provide for regulation, load forecasting error, equipment forced and scheduled outages, and local area protection. It includes both spinning and nonspinning reserve.

Peak Demand or Load — The greatest demand that occurs during a specified period of time.

Power Pool — Entity established to coordinate short-term operations to maintain system stability and achieve least-cost dispatch. The dispatch provides backup supplies, short-term excess sales, reactive power support, and spinning reserve. Historically, some of these services were provided on an unpriced basis as part of the power pool members' utility franchise obligations. Coordinating short-term operations includes the aggregation

and firming of power from various generators, arranging exchanges between generators, and establishing (or enforcing) the rules of conduct for wholesale transactions. The pool may own, manage, and/or operate the transmission lines (i.e., wires) or be an independent entity that manages the transactions between entities. Often, the power pool is not meant to provide transmission access and pricing or to provide settlement mechanisms if differences between contracted volumes among buyers and sellers exist.

Reactive Power — Portion of electricity that establishes and sustains the electric and magnetic fields of alternating-current equipment. Reactive power must be supplied to most types of magnetic equipment, such as motors and transformers. It also must supply the reactive losses on transmission facilities. Reactive power is provided by generators, synchronous condensers, or electrostatic equipment such as capacitors and directly influences electric system voltage. It is usually expressed in kilovars (kVAR) or megavars (MVAR).

Real Power — Rate of producing, transferring, or using electrical energy, usually expressed in kilowatts (kW) or megawatts (MW).

Reliability — Degree of performance of the elements of the bulk power system that results in electricity being delivered to customers within accepted standards and in the amount desired. Reliability may be measured by the frequency, duration, and magnitude of adverse effects on the electric supply. Electric system reliability can be addressed by considering two basic and functional aspects of the electric system — adequacy and security.

Reserve — Electric power generating capacity in excess of the system load projected for a given time period. It consists of two sources: spinning reserve and supplemental reserve.

Retail Sales — With regard to the electric industry, electrical energy supplied for residential, commercial, and industrial end-use purposes. Other small end-use classes, such as agriculture and street lighting, also are included.

Schedule — Agreed-upon transaction size (megawatts), start and end time, beginning and ending ramp times and rate, and type required for delivery and receipt of power and energy between the contracting parties and the control area(s) involved in the transaction.

Security — Ability of the electric system to withstand sudden disturbances, such as electric short circuits or unanticipated loss of system elements.

Security Coordinator — One of 23 entities established by NERC with the responsibility and authority to direct actions aimed at maintaining real-time security for a control area, group of control areas, NERC subregion, or NERC region.

Short-Notice or Short-Term Transaction — Transaction for the transfer of net energy from one region to another, made with little time between the transaction and the transfer (typically, less than one hour).

Spinning Reserve — Ancillary service that provides additional capacity from electricity generators that are on line, loaded to less than their maximum output, and available to serve customer demand immediately should a contingency occur.

Stability — Ability of an electric system to maintain a state of equilibrium during normal and abnormal system conditions or disturbances.

Supplemental Reserve — Ancillary service that provides additional capacity from electricity generators that can be used to respond to a contingency within a short period, usually 10 minutes.

System — see Electric System.

System Operator — Individual at an electric system control center whose responsibility it is to monitor and control that electric system in real time.

Tariff — Schedule detailing the terms, conditions, and rate information applicable to various types of electric service.

Topology — Structure and layout of a system.

Transmission — Interconnected group of lines and associated equipment for the movement or transfer of electric energy between points of supply and points at which it is transformed for delivery to customers or is delivered to other electric systems.

Unit — see Generating Unit.

Unit Commitment — Process of determining which generators should be operated each day to meet the daily demand of the system.

Utility — see Electric Utility.

Volt-Ampere-Reactive (VAR) — Unit of measure of the power that maintains the constantly varying electric and magnetic fields associated with alternating-current circuits. See Reactive Power.

Voltage — The unit of measure of electric potential.

Voltage Collapse — An event that occurs when an electric system does not have adequate reactive support to maintain voltage stability. Voltage collapse may result in outage of system elements and may include interruption in service to customers.

Wholesale Electricity Market — Purchase and sale of power, according to agreements with varying lengths and lead times, among power marketers, power producers, and other wholesale entities.