Lawrence Berkeley National Laboratory

# Optimizing Operational Efficiency: Integrating Energy Information Systems and Model-Based Diagnostics

Jessica Granderson, Guanjing Lin, David Blum,
Shankar Earni, Janie Page, and Mary Ann Piette

Lawrence Berkeley National Laboratory

Energy Technologies Area
December, 2017

DOI: 10.20357/B7988J

# REPORT DOCUMENTATION PAGE

*Form Approved*
*OMB No. 0704-0188*

Public reporting burden for this collection of information is estimated to average 1 hour per response, including the time for reviewing instructions, searching existing data sources, gathering and maintaining the data needed, and completing and reviewing this collection of information. Send comments regarding this burden estimate or any other aspect of this collection of information, including suggestions for reducing this burden to Department of Defense, Washington Headquarters Services, Directorate for Information Operations and Reports (0704-0188), 1215 Jefferson Davis Highway, Suite 1204, Arlington, VA 22202-4302. Respondents should be aware that notwithstanding any other provision of law, no person shall be subject to any penalty for failing to comply with a collection of information if it does not display a currently valid OMB control number. **PLEASE DO NOT RETURN YOUR FORM TO THE ABOVE ADDRESS.**

| | | |
|---|---|---|
| **1. REPORT DATE** *(DD-MM-YYYY)*<br>31-12-2017 | **2. REPORT TYPE**<br>**Draft Final Report** | **3. DATES COVERED** *(From - To)*<br>*March 2012-December 2017* |
| **4. TITLE AND SUBTITLE**<br>Optimizing Operational Efficiency: Integrating Energy Information Systems and Model-Based Diagnostics | | **5a. CONTRACT NUMBER**<br>EW-2012-54<br>**5b. GRANT NUMBER**<br>**5c. PROGRAM ELEMENT NUMBER** |
| **6. AUTHOR(S)**<br>Jessica Granderson, Guanjing Lin, David Blum, Shankar Earni, Janie Page, Mary Ann Piette | | **5d. PROJECT NUMBER**<br>ESTCP# 12-EB-EW4-015<br>**5e. TASK NUMBER**<br>**5f. WORK UNIT NUMBER** |
| **7. PERFORMING ORGANIZATION NAME(S) AND ADDRESS(ES)**<br>LBNL, 1 Cyclotron Road, Berkeley, CA 94720 | | **8. PERFORMING ORGANIZATION REPORT NUMBER**<br>LBNL report number TBD |
| **9. SPONSORING / MONITORING AGENCY NAME(S) AND ADDRESS(ES)** | | **10. SPONSOR/MONITOR'S ACRONYM(S)**<br>**11. SPONSOR/MONITOR'S REPORT NUMBER(S)** |

**12. DISTRIBUTION / AVAILABILITY STATEMENT**
**Approved for public release; distribution is unlimited**

**13. SUPPLEMENTARY NOTES**

**14. ABSTRACT**

This report documents findings from a demonstration project to verify the feasibility of employing a model-based approach to central plant operation and diagnostics at DoD facilities, and to quantify the associated benefits. Specific objectives that the field demonstration was designed to validate included: effectiveness in reducing electricity consumption and associated greenhouse gas emissions; user satisfaction; cost effectiveness and viability of system economics; and validity of model calibration. The development and design of the technology is described, as well as its demonstration at the US Naval Academy. The model-based optimization of condenser water temperature setpoints has the potential to save over ten percent in daily energy use, for six months out of the year. However, since these savings are achieved during low-load winter operations, the annual savings potential is 1.4%. (Savings potential was driven by wet bulb temperature, and therefore is higher in drier climates.) This translated to approximately $30K per year, which is achievable at simple and discounted paybacks of 1.4 years. These capabilities were delivered through a software interface that was rated by operators as highly satisfactory with respect to the current operational tools in place at the installation. The software will be made available for expanded implementation through open source license.

**15. SUBJECT TERMS**

| **16. SECURITY CLASSIFICATION OF:** | | | **17. LIMITATION OF ABSTRACT** | **18. NUMBER OF PAGES** | **19a. NAME OF RESPONSIBLE PERSON** |
|---|---|---|---|---|---|
| **a. REPORT** | **b. ABSTRACT** | **c. THIS PAGE** | | | **19b. TELEPHONE NUMBER** *(include area code)* |

**Standard Form 298 (Rev. 8-98)**
**Prescribed by ANSI Std. Z39.18**

# FINAL REPORT

*Optimizing Operational Efficiency: Integrating Energy Information Systems and Model-Based Diagnostics*

*201254*

**Energy and Water Projects**

**December 2017**

## DISCLAIMER

This document was prepared as an account of work sponsored by the United States Government. While this document is believed to contain correct information, neither the United States Government nor any agency thereof, nor the Regents of the University of California, nor any of their employees, makes any warranty, express or implied, or assumes any legal responsibility for the accuracy, completeness, or usefulness of any information, apparatus, product, or process disclosed, or represents that its use would not infringe privately owned rights. Reference herein to any specific commercial product, process, or service by its trade name, trademark, manufacturer, or otherwise, does not necessarily constitute or imply its endorsement, recommendation, or favoring by the United States Government or any agency thereof, or the Regents of the University of California. The views and opinions of authors expressed herein do not necessarily state or reflect those of the United States Government or any agency thereof or the Regents of the University of California

## ACKNOWLEDGEMENTS

This work was supported by the Assistant Secretary for Energy Efficiency and Renewable Energy, Building Technologies Office, of the U.S. Department of Energy under Contract No. DE-AC02-05CH11231. The authors would like to thank the Environmental Security Technology Certification Program for supporting this study, with special thanks to Timothy Tetreault (Noblis), Christopher Crouse (NAVFAC HQ), Tim Rath (USNA), John Barton (USNA), Wangda Zuo (University of Miami), Michael Wetter, Oren Schetrit, Marco Bonvini, Michael Spears, and Stephen Czarnecki (all of LBNL), and Daniel McQuillen (McQuillen Interactive).

# EXECUTIVE SUMMARY

This report documents findings from a demonstration project to verify the feasibility of employing a model-based approach to central plant operation and diagnostics at U.S. Department of Defense (DoD) facilities, and to quantify the associated benefits. Specific objectives that the field demonstration was designed to validate included: effectiveness in reducing electricity consumption and associated greenhouse gas (GHG) emissions; user satisfaction; cost-effectiveness and viability of system economics; and validity of model calibration.

## TECHNOLOGY OVERVIEW

It is estimated that 5%–30% of the energy used in commercial buildings is wasted due to faults and errors in the operation of the control system, including suboptimal setpoints, operational sequences, and control problems. In this demonstration Lawrence Berkeley National Laboratory (LBNL) developed a hybrid data-driven and physics model-based ope  rational tool for energy efficiency in central cooling plants. Whereas empirical data-driven analytics permit assessment of operations based on *actual prior* system performance, physics-based approaches also enable assessment relative to *design intent* and underlying physical principles. The tool, PlantInsight, provides detection and diagnosis of three types of faults: fan cycling, chiller cycling, and poor chiller efficiency. It also provides analysis of optimal condenser water setpoint temperatures to minimize plant energy consumption. A calibrated simulation model is used in the algorithms to identify poor chiller efficiency and optimal condenser water temperature, while the cycling faults are identified using purely data-driven models. In addition, the tool offers visualization for operators to track key parameters such as cooling plant load and chilled water loop temperature. Figure ES-1 contains a diagram of the Modelica model used to conduct the cooling optimization and the architecture of the PlantInsight tool, as implemented for the demonstration. Figure ES-2 contains screen shots of the user interface.

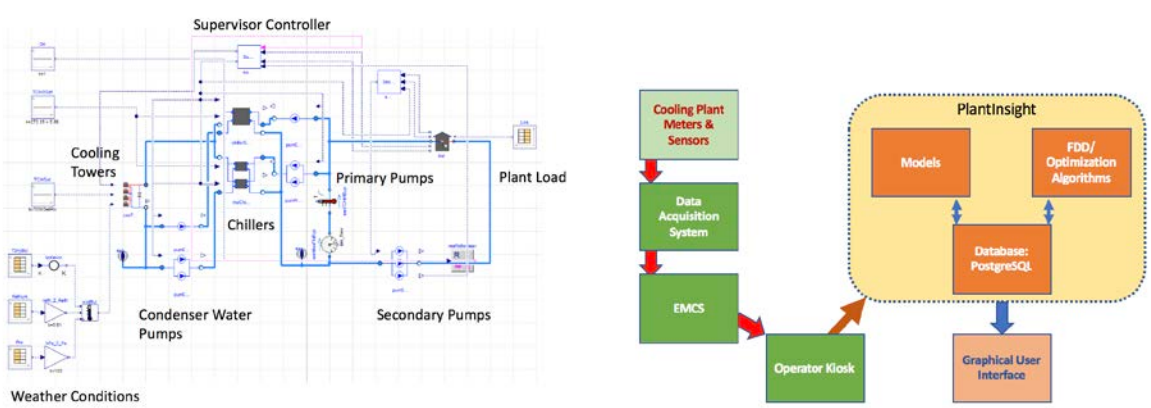


*Figure ES- 1. Diagram of the system-level Modelica model used to represent the cooling plant (left); architecture (right) of the PlantInsight operational tool*

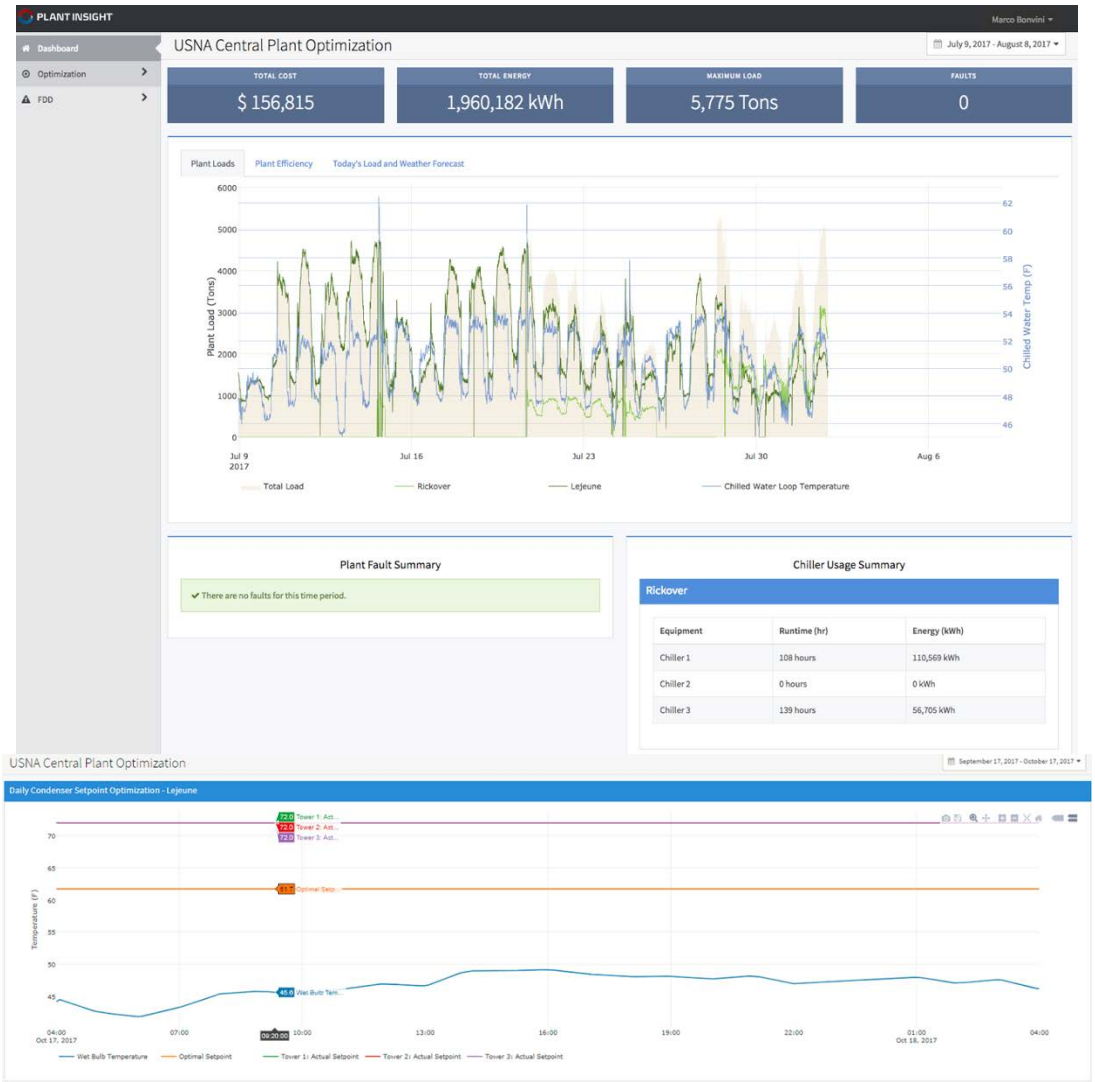


*Figure ES- 2. Screen shots from PlantInsight: Visualization and KPI tracking (top); condenser water temperature setpoint optimization (bottom)*

## KEY FINDINGS

Once developed, the PlantInsight technology was implemented at the U.S. Naval Academy (USNA), and the technology performance objectives were evaluated.

*Model calibration:* To ensure that the models developed to simulate the central plant were representative of the central plant's actual physical performance, the chiller and tower models were calibrated to measured data from the site. The calibration goal targeted a difference between model-predicted and measured parameters of less than 10% for 90% of data points. This was achieved for ten of ten tower cells for which data were available, and for three of six

chillers. The soundness of the calibration process was confirmed, however for the chillers, calibration was challenged by the limited volume of data representing full-capacity operation, and perhaps by inaccurate chilled water temperature sensor data, or faulty operations underlying the data.

*User satisfaction:* The demonstration technology was evaluated to determine whether PlantInsight offered equal or improved satisfaction relative to existing operational tools. This objective was used to determine the extent to which the demonstration technology met the needs of site operational staff. Survey responses indicated that satisfaction with the capabilities of PlantInsight was equal to or better than that with the preexisting JCI Metasys system that is used for plant operations. Although PlantInsight is intended to complement (not replace) the Metasys system, from a user satisfaction standpoint, it provides a meaningful benchmark. Table ES-1 summarizes operational staff's feedback on the user interface (UI), outputs of the fault detection and diagnosis (FDD) and optimization analytics, and the tool overall, on a scale of one to five.

*Table ES- 1. User feedback on the PlantInsight UI, FDD, and optimization outputs, and overall tool*

| **Characteristic** | **Not Satisfied** | | **Neutral** | | **Highly Satisfied** |
|---|---|---|---|---|---|
| | **1** | **2** | **3** | **4** | **5** |
| User interface | | | | X | |
| FDD and optimization outputs | | | | X | |
| Tool overall | | | | X | |

*Energy and greenhouse gas emissions (GHG) savings:* The demonstration targeted 10% annual reductions in electricity consumption and associated GHG emissions at the central cooling plant. The baseline comprised the conventional operation of the plant, using a static condenser water temperature setpoint. Energy savings potential was evaluated by comparing the simulated annual energy consumption with and without use of the optimized setpoints from PlantInsight. The results of the analysis indicated that daily energy savings greater than 10% are obtainable for approximately six months of the year, mainly during the winter season. However, for the year as a whole, energy savings of approximately 1.5% are obtainable. This was because savings were driven by wet bulb temperature (lower), which occur in the winter season when total plant consumption is lowest. Larger annual savings are possible in drier climates.

Greenhouse gas emissions were quantified using a conversion factor based on references published by the U.S. Environmental Protection Agency (eGRID and the *Greenhouse Gas Emissions Technical Reference*). Since the conversion factor was represented as a single constant for the region, the emissions reduction results are the same as those for energy, in terms of percent savings. That is, greater than 10% daily GHG emissions savings are achievable throughout six months of the year—mainly the winter season. However, only 1.38% (181,403 tons) *annual* savings are possible in the USNA's more humid climate.

*System economics:* Assessment of system economics based on standard capital budgeting metrics provides a gauge for determining financial feasibility of the demonstration technology. Using the findings from the demonstration, a life-cycle cost analysis was conducted in accordance with the principles of the National Institute of Standards and Technology (NIST) Building Life-Cycle Cost Analysis (BLCCA) process, as published in NIST Handbook 135. The BLCC calculator was used to determine the benefit of the proposed demonstration technology relative to the "do-nothing" case of continued use of a static condenser water temperature setpoint at the cooling plant. The analysis showed that simple and discounted payback can be met in 1.4 years, well within the five-year target that was established. Although savings are relative small on an annual basis, the total plant energy costs are on the order of several million dollars per year. The annual savings are therefore large enough to offset the cost of implementing the open source software technology at a new installation. There are no licensing fees, and the cost of initial implementation, modeling, and calibration—as well as ongoing cost of use and maintenance—are recoverable within acceptable payback periods.

## TECHNOLOGY TRANSITION

Future implementation of the technology concerns three pertinent issue areas: Information technology (IT) security, maintenance and evolution, and scale-up and transition.

*IT security:* The PlantInsight technology requires unidirectional transfer of cooling plant operational data *from* the site *to* the application's database. The application is hosted on a web server, and is accessible via web browser. In the USNA demonstration, port 443 was used to establish secure communications from the Metasys building automation system (BAS) kiosk to the PlantInsight application. To satisfy DoD IT security requirements, future installations can consider several options that surfaced over the duration of the demonstration. PlantInsight can be integrated within existing accredited applications, as was the original intent when the demonstration was first initiated. This would require some re-architecting of the code based on the specific technology to be integrated with, however in anticipation of this mode of delivery, PlantInsight has been designed with modular separation of the interfaces between the models, algorithms, and user-facing information provided through the graphical user interface (GUI). Alternatively, PlantInsight could be put through the accreditation process itself. Another option that was explored was to push plant operational data from the installation to a server farm on a secure DoD network, with PlantInsight accessing the data through a virtual private network (VPN) application.

*Technology maintenance and evolution:* As the demonstration comes to a conclusion, LBNL will work with UNSA IT to transfer the tool from LBNL's server to a server and location that will comply with IT security requirements. This is a key step in ensuring that the technology can continue to provide efficiency improvements to the chiller plant operations. Similarly, as the campus grows and cooling load is added, plant equipment is updated, and operations evolve over time, it will be necessary to update and recalibrate the models used in PlantInsight. Although it is not yet used universally throughout the industry, companies such as HOK, Johnson Controls (JCI), and United Technologies Corporation (UTC) have staff that are familiar with the modeling

language (Modelica) upon which the tool is built. They could potentially be contracted to support future model modification and calibration.

*Technology scale-up and transition:* To make the PlantInsight Tool available to other DoD installations, it will be released through an open source software license. This will enable stand-alone use according to its current design, or adaptation for use within existing installation energy management facility and information systems as described in the considerations of IT security. Several types of documentation have been developed to support these future transition activities, and to support ongoing use at USNA.

For developers and implementers: (a) code documentation describing key module integration, functionality, and dependencies; (b) higher level documentation of tool architecture and installation and configuration requirements (to be released with code); and (c) guidance on model creation and calibration.

For installation users: A user guide in document form that explains the tool's functionality and how it can be used to generate and track energy and utility cost savings.

## CONCLUSIONS

Future implementations of the technology will benefit from awareness of the following higher-level lessons that were learned throughout the course of the demonstration. First, operators place strong value on access to tools that provide visibility into how controls impact energy use and cost. This is not as a rule available in today's commercial analytics technologies that span building automation systems, meter analytics tools, or equipment-specific fault detection and diagnostics tools. As such, heating, ventilation and air conditioning (HVAC) optimization technologies represent advances in the state of today's available technology, and this is even more true of optimization tools that incorporate physics-based modeling approaches. The Environmental Security Technology Certification Program's (ESTCP) technology demonstration program has acted as a leader in the demonstration of these cutting-edge solutions, and future implementations will continue to contribute to the state of knowledge of their development and application.

Model-predictive optimization combined with fault detection and diagnostics is recognized as a critical aspect of realizing the dynamic low-energy buildings of tomorrow, and today's applications can deliver even more impact from expanding the set of parameters that are included in the optimization, as well as the number of end uses that are considered. Although these technologies represent advanced forward-looking applications, the external infrastructure to support their delivery at scale is mature; cloud hosting and computational scalability are well supported through modern IT solutions. In contrast, the most significant practical implementation barrier are the brittle building data acquisition and communication systems that present chronic challenges to analytics applications that need to interface with controls data. Finally, we note that the creation and calibration of physics-based models that are intended to be used in the operational phase of the building life-cycle is highly dependent upon the specific

algorithms with which they will be paired. The open, reference implementations that are delivered with PlantInsight are important contributions to the industry's continued success in leveraging these promising approaches for next-generation building energy efficiency.

## ABBREVIATIONS

| | |
|---|---|
| API | application programming interfaces |
| ASHRAE | American Society for Heating, Refrigerating, and Air-Conditioning Engineers |
| BAESA | building, asset, and energy situational awareness |
| BAS | building automation system |
| BLCC | Building Life-Cycle Cost |
| BLCCA | Building Life-Cycle Cost Analysis |
| Btu | British thermal unit |
| CHW | campus-wide chilled water |
| $CO_2$ | carbon dioxide |
| COP | coefficient of performance |
| COV | change of value |
| DIACAP | DoD Information Assurance Certification and Accreditation Process |
| DoD | U.S. Department of Defense |
| eGRID | Emissions & Generation Resource Integrated Database |
| EIS | energy information systems |
| EISA | Energy Independence and Security Act |
| EMCS | energy management and control system |
| EMIS | energy management and information systems |
| EO | Executive Order |
| EPA | U.S. Environmental Protection Agency |
| ESTCP | Environmental Security Technology Certification Program |
| FDD | fault detection and diagnosis |
| FMI | functional mockup interface |
| GHG | greenhouse gas |
| GUI | graphical user interface |
| HVAC | heating, ventilation and air conditioning |
| IT | Information technology |
| JCI | Johnson Controls International |
| KPI | key performance indicator |
| kW | kilowatt |
| kWh | kilowatt-hour |
| LBNL | Lawrence Berkeley National Laboratory |
| NAVFAC | Naval Facilities Engineering Command |
| NDW | Naval District Washington |
| NIST | National Institute of Standards and Technology |
| NOx | nitrogen oxide |
| O&M | operations and maintenance |
| RMF | Risk Management Framework |
| SIR | savings-to-investment ratio |
| $SO_2$ | sulfur dioxide |

| | |
|---|---|
| UI | user interface |
| UKF | unscented Kalman filtering |
| USNA | U.S. Naval Academy |
| UTC | United Technologies Corporation |
| VPN | virtual private network |
| VFD | variable frequency drive |
| W | watt |
| WNY | Washington Navy Yard |

# Table of Contents


Executive Summary i
Technology Overview i
Key Findings ii
Technology Transition iv
Conclusions v
1.0 INTRODUCTION 1
1.1 BACKGROUND 1
1.2 OBJECTIVE OF THE DEMONSTRATION 2
1.3 REGULATORY DRIVERS 3
2.0 TECHNOLOGY DESCRIPTION 4
2.1 TECHNOLOGY OVERVIEW 4
2.2 TECHNOLOGY DEVELOPMENT 6
2.2.1 Model Construction and Calibration 6
2.2.2 Optimization and FDD Algorithms 12
2.2.2.1 Optimization Algorithm 12
2.2.2.2 Fault Detection and Diagnostic Algorithms 14
2.2.3 Architecture Definition 17
2.2.4 GUI Development 18
2.3 ADVANTAGES AND LIMITATIONS OF THE TECHNOLOGY 23
3.0 PERFORMANCE OBJECTIVES 25
4.0 FACILITY/SITE DESCRIPTION 31
4.1 FACILITY/SITE LOCATION AND OPERATIONS 31
4.2 FACILITY/SITE CONDITIONS 32
5.0 TEST DESIGN 35
5.1 CONCEPTUAL TEST DESIGN 35
5.2 BASELINE CHARACTERIZATION 35
5.3 DESIGN AND LAYOUT OF TECHNOLOGY COMPONENTS 36
5.4 OPERATIONAL TESTING 41
5.5 SAMPLING PROTOCOL 41
5.6 SAMPLING RESULTS 46
6.0 PERFORMANCE ASSESSMENT 49
6.1 REDUCE CENTRAL PLANT ELECTRICITY USE 49
6.2 REDUCE CENTRAL COOLING PLANT GREENHOUSE GAS EMISSIONS 54
6.3 SYSTEM ECONOMICS 54

6.4 CENTRAL PLANT MODEL CALIBRATION 54
6.5 USER SATISFACTION 57
7.0 COST ASSESSMENT 60
7.1 COST MODEL 60
7.2 COST DRIVERS 62
7.3 COST ANALYSIS AND COMPARISON 62
8.0 IMPLEMENTATION ISSUES 65
9.0 REFERENCES 69
APPENDICES 72
Appendix A: Points of Contact 72
Appendix B: Source Code Description and Use 73
B.1 Deployment 73
B.2 Scheduled Tasks 73
B.3 Update_support_data 74
B.4 Fault Detection and Diagnosis 74
B.5 Optimization 75
Appendix C: User Satisfaction Survey 78
Appendix D: Cost Model and Life-Cycle Cost Analysis for PlantInsight (NIST BLCC 5.3-17: Comparative Analysis) 81
Appendix E: Resources on Model Creation and Calibration 85
Appendix F: PlantInsight User Guide 86
F.1 Start the PlantInsight Application 86
F.2 Landing Page Dashboard of PlantInsight 86
F.3 Optimization 91
F.4 Fault Detection and Diagnosis (FDD) 93
Appendix G: Action Items 96

# Table of Figures

Figure ES- 1. Diagram of the system-level Modelica model used to represent the cooling plant (left); architecture (right) of the PlantInsight operational tool....i
Figure ES- 2. Screen shots from PlantInsight: Visualization and KPI tracking (top); condenser water temperature setpoint optimization (bottom).... ii

Figure 1. Screen shot of the landing page of the PlantInsight tool ....5
Figure 2. Architecture of the PlantInsight tool for hybrid model-based and data-driven central plant diagnostics and optimization ....6
Figure 3. Diagram of the Modelica model of the 2,500-ton chiller at the Rickover plant ....8
Figure 4. Diagram of the Modelica model for a cooling tower at the Rickover plant ....8
Figure 5. Diagram of the Modelica model for chiller staging in the supervisor controller....9
Figure 6. Diagram of the system-level Modelica model for the Rickover cooling plant....10
Figure 7. Fault aggregation algorithm. A single faulty period is displayed to the user if two faulty intervals are within two hours (left). If the time interval is greater than two hours (right), two faulty periods are displayed. 15
Figure 8. Illustration of the Python, Django, and PostgresSQL components of PlantInsight, and data transfer from USNA ....18
Figure 9. Screen shots of the condenser water temperature setpoint optimization features in PlantInsight: (Top) Optimal and conventional condenser water setpoints with predicted wet bulb temperature. (Bottom) Measured and predicted optimal power. ....20
Figure 10. Screen shot of the chiller efficiency fault detection and diagnostic features in the PlantInsight tool for a fault-free period of operation....21
Figure 11. Screen shot of the cycling fault detection results overview in the PlantInsight tool for a time period during which a tower fan cycling fault was detected ....22
Figure 12. Screen shot of the cycling fault detection “drill down” results for Rickover Tower 1 Cell A in the PlantInsight tool when a tower cycling fault was detected ....22
Figure 13. Zoom-in of the data verifying the fan cycling detected in the PlantInsight tool ....23
Figure 14. Map of the U.S. Naval Academy. The central plants serving the campus chilled water loop are located in Lejeune (south end of campus) and Rickover (north end of campus). ....32
Figure 15. Lejeune plant cooling towers (left), chillers and pump (right)....33
Figure 16. Configuration of the USNA cooling plants and the chilled water loop....34
Figure 17. Schematic diagram of the Rickover plant chilled water system....37
Figure 18. Schematic diagram of the Rickover plant condenser water system....38
Figure 19. Schematic diagram of the Lejeune plant chilled water system....39
Figure 20. Schematic diagram of the Lejeune plant condenser water system ....40
Figure 21. Location of chilled water temperature sensors at the Rickover plant....44
Figure 22. Quality assurance check for the Rickover Chiller 1 chilled water leaving temperature sensor: The data were plotted from September 13, 2015, when only Chiller 1 was running and the decoupler flow direction was from leaving to entering chilled water....46
Figure 23. Quality assurance check for the Lejeune Chiller 1 chilled water entering temperature sensor: The data were plotted from July 13, 2015, when only Chiller 1 was running and the decoupler flow direction was from entering to leaving chilled water....46
Figure 24. Operational data for Rickover Chiller 3: April 6–10, 2017....47
Figure 25. Operational data for Rickover Tower 4: April 6–10, 2017 ....47
Figure 26. Relative humidity and dry bulb temperature data for April 6–10, 2017....48
Figure 27. Rickover cooling tower leaving temperature setpoint changing due to the implementation of an optimized setpoint from April 6–10, 2017 ....48
Figure 28. Simulated daily energy savings from September 2014 through September 2015 (left: absolute value; right: relative) ....50
Figure 29. Baseline energy data: metered (blue) vs. modeled (red) ....52

Figure 30. Actual vs. baseline-predicted energy use (test period: April 7–10, 2017) during which 17% energy savings were quantified ....53
Figure 31. Comparison of simulated and measured chiller coefficient of performance for chiller Lej-CH2, for which the model calibration performance objective was met (left,) and for chiller Lej-CH3, for which it was not met (right) ....56
Figure 32. Comparison of simulated (left) and measured (right) cooling tower fan power and cooling tower leaving temperature for tower Rick-T3A. In both cases the model calibration performance objective was met. ....56
Figure 33. Use of a server farm in a secure Navy network to host data for PlantInsight ....66
Figure 34. Illustration of the Enabler data transport system that was previously under development by NDW ....66

Figure F- 1. PlantInsight login page ....86
Figure F- 2. PlantInsight dashboard landing page ....87
Figure F- 3. Navigation bar of the landing page ....87
Figure F- 4. Date range selector at the top right of the landing page ....88
Figure F- 5. Plant load history plot at the center of the landing page ....89
Figure F- 6. Zoom-in feature of the plant load history plot ....89
Figure F- 7. Plant efficiency history plot at the center of the landing page ....90
Figure F- 8. Today's load and weather forecast plot at the center of the landing page ....90
Figure F- 9. Plant fault (top) and equipment (bottom) summary, shown in the lower portion of the landing page....91
Figure F- 10. Optimization results page for the Rickover plant ....92
Figure F- 11. Optimization page for the Lejeune plant ....93
Figure F- 12. The FDD overview page ....94
Figure F- 13. The equipment-specific fault drill-down page ....95

# Table of Tables

Table ES- 1. User feedback on the PlantInsight UI, FDD, and optimization outputs, and overall tool .... iii

Table 1. Variables used in the model calibration ....12
Table 2. Performance objectives ....25
Table 3. Summary of data and monitoring points used for technology development and operation ....42
Table 4. Results of quality assurance checks for chilled water temperature sensors ....45
Table 5. Savings breakdown for Rickover ....51
Table 6. Savings breakdown for Lejeune ....51
Table 7. Percentage of calibration data points within the 10% error band ....55
Table 8. User feedback on the three to five most valuable capabilities of PlantInsight (demonstration technology)..58
Table 9. User feedback on the PlantInsight user interface, FDD, and optimization outputs, and on the tool overall..58
Table 10. Summary of demonstration technology cost elements and estimates ....60
Table 11. Mapping of the BLCC tool inputs to elements of the demonstration technology cost model ....63

Table B- 1. Main functions and purposes of the task "update_support_data" ....74

Table D- 1. Comparison of Present-Value Costs ....82
Table D- 2. Net savings from Alternative compared with Base Case ....82
Table D- 3. Energy Savings Summary ....84
Table D- 4. Energy Savings Summary (in MBtu) ....84
Table D- 5. Emissions Reduction Summary ....84

# 1.0 INTRODUCTION

## 1.1 BACKGROUND

It is estimated that 5%–30% of the energy used in commercial buildings is wasted due to faults and errors in the operation of the control system, including suboptimal setpoints, operational sequences, and control problems (Fernandez et al. 2017; Katipamula and Brambley 2005; Mills 2011; Roth et al. 2005). Existing buildings are often not properly commissioned for efficient operations, and performance degrades when retrofits, faults, and other improvements are not appropriately monitored over time. Monthly utility bills commonly used by facility and energy managers provide limited insight into building and system energy performance; however, analytics software is increasingly used to improve and maintain operational efficiency in commercial buildings.

Energy managers, owners, and operators are using a diversity of commercial offerings often referred to as Energy Information Systems (EIS), Fault Detection and Diagnosis (FDD) systems, or more broadly Energy Management and Information Systems (EMIS) to cost-effectively enable savings on the order of 10% to 20% (Granderson and Lin 2016; Granderson et al. 2017; Kramer et al. 2017; Henderson and Waltner 2013; Lane and Epperson 2013). Most of these EMIS analytic technologies use data from meters and sensors, with rule-based and/or data-driven models to characterize system and building behavior. For example, Microsoft, which maintains the largest contiguous corporate campus in the United States, has recently deployed a rule-based FDD system for building-level HVAC operations. By collecting and analyzing millions of data points per day, the company has been able to embark on multiple improvements that are reshaping the way its buildings are managed. Microsoft's building engineers have become far more proactive: instead of "walking around" to find issues, they're now "walking to" the problems that have the greatest impact on cost or comfort, and have saved over 18% in electricity consumption at their Puget Sound campus, with rapid payback (Granderson et al. 2017; Smith et al. 2011).

Within the family of EMIS technologies, automated HVAC system optimization offerings are beginning to emerge. Newer to the market than meter analytics and FDD technologies, these tools use physics-based, or more commonly data-driven, models to predict optimal supervisory system control settings. These are then automatically implemented through bi-directional connectivity and communication with the building automation system (BAS).

In contrast to data-driven approaches, physics-based modeling uses first principles and engineering models (e.g., efficiency curves) to characterize system and building behavior. Historically, these physics-based approaches have been used in the design phase of the building life cycle or in retrofit analyses. Whereas empirical data-driven analytics permit assessment of operations based on *actual prior* system performance, physics-based approaches also enable assessment relative to *design intent* and underlying physical principles. Physics-based models can be used to automate the detection of system or component faults, and to identify optimal control strategies to minimize system energy use. A second value of these models is they can be

used as a reference to support future retrofits, so that HVAC and related building systems can be further improved beyond operational, tune-up interventions from this technology. The use of hybrid data-driven and model-based approaches for operational tools that conduct continuous fault detection and energy use optimization is largely still the domain of exploratory research. For example, a previous attempt (Pang et al. 2012) to use EnergyPlus physics-based models to identify whole-building level operational energy waste was proposed and demonstrated (Adetola et al. 2014).

In this demonstration, Lawrence Berkeley National Laboratory (LBNL) developed a hybrid data-driven and physics model-based operational tool for energy efficiency in central cooling plants. The tool, PlantInsight, offers FDD functionality, setpoint optimization, and visualization of key performance parameters, targeting 10% energy savings and associated reductions in greenhouse gas (GHG) emissions. With annual U.S. Department of Defense (DoD) expenditures of $3.7 billion on facility energy consumption (DoD 2016), and HVAC comprising over 40% of commercial building site energy usage (US EIA 2012), the savings potential reaches hundreds of millions of dollars if the technology is successful and applied across all DoD facilities and HVAC end uses. The key targets for this specific demonstration are facilities with central cooling plants. This represents a smaller, but more energy intensive, fraction of DoD facilities.

## 1.2 OBJECTIVE OF THE DEMONSTRATION

The overarching goal of the demonstration project was to verify the feasibility of employing a model-based approach to central plant operation and diagnostics at DoD facilities, and to quantify the associated benefit. Although the tools developed under this project can be applicable to both buildings and central plants, the primary focus is on central plant energy efficiency.

Specific objectives that the field demonstration was designed to validate include:

- Effectiveness in reducing electricity consumption and associated GHG emissions
- Ease of use and user acceptability
- Cost-effectiveness and viability of system economics
- Validity of model calibration
- Acceptable latency in data transfer between software components

Additional attributes that were targeted in the design of the technology included scalability, and open source code and application programming interfaces (APIs) to avoid “lock-in” and support integration with complementary commercial analytics tools. The development and field testing process was also used to identify high-value monitoring points that can be leveraged to maximize the value of whole-facility metering.

It was originally planned that the demonstration would be conducted at the U.S. Navy Yard in Washington D.C., and that the technology would be integrated with Naval District Washington’s (NDW’s) Building, Asset, and Energy Situational Awareness (BAESA) and IBM monitoring systems. Due to disruptions at the Navy Yard that affected the central plant operations and ability

to host a demonstration, the project was moved to the U.S. Naval Academy in Annapolis, Maryland. (Site points of contact are provided in Appendix A.) Over the course of the project the Naval District Washington discontinued its use of the IBM system, so the PlantInsight tool was deployed as a stand-alone tool.

## 1.3 REGULATORY DRIVERS

This technology demonstration leverages and supports compliance with several regulatory drivers. Advanced metering was required at federal buildings beginning in 2012 (Energy Policy Act of 2005, section 103, codified in 42 USC 8253(e)), providing a foundation of metering and monitoring infrastructure that the demonstration builds upon. Analytics technologies such as those demonstrated in this project support the automation of baselining and performance reporting, which are required in the Energy Independence and Security Act (EISA) 2007. Finally, the advanced diagnostic capabilities that will be integrated with EIS in this demonstration will further enable compliance with the 30% energy reduction and associated carbon reduction goals in Executive Orders (EOs) 13423 and 13514, and EISA 2007. Most recently, Executive Order 13693, signed in March 2015 and effective the beginning of fiscal year 2016, calls for the promotion of building energy conservation, efficiency, and management by reducing agency building energy intensity (measured in British thermal units [Btu] per gross square foot) by 2.5% annually through the end of fiscal year 2025, relative to the baseline of the agency's building energy use in fiscal year 2015 and taking into account agency progress to date.

# 2.0 TECHNOLOGY DESCRIPTION

## 2.1 TECHNOLOGY OVERVIEW

PlantInsight is a hybrid data-driven and physics model-based operational tool for energy efficiency in central cooling plants. It provides detection and diagnosis of three types of faults: fan cycling, chiller cycling, and poor chiller efficiency. It also provides analysis of optimal condenser water setpoint temperatures to minimize plant energy consumption. A calibrated simulation model is used in the algorithms to identify poor chiller efficiency, and optimal condenser water temperature, while the cycling faults are identified using purely data-driven models. In addition, the tool offers visualization for operators to track key parameters such as cooling plant load and chilled water loop temperature.

Figure 1 shows the landing page of the tool. The period of time for which data are shown and faults are summarized is user-selected and shown in the upper right date summary. In the plot, the total load on both plants (tons) is overlaid with the load from each plant individually. The landing page plots can be toggled to plant efficiency (kilowatts [kW]/ton) as well as the load and weather forecast for the next 24 hours. Above the plot, the total cost of operations, total consumption, maximum load, and number of current faults are summarized in key performance indicator (KPI) tiles. The landing page also shows runtime summaries and fault summaries. The menu options on the left side of the page allow the user to access drill-down information associated with the optimization and fault detection capabilities.

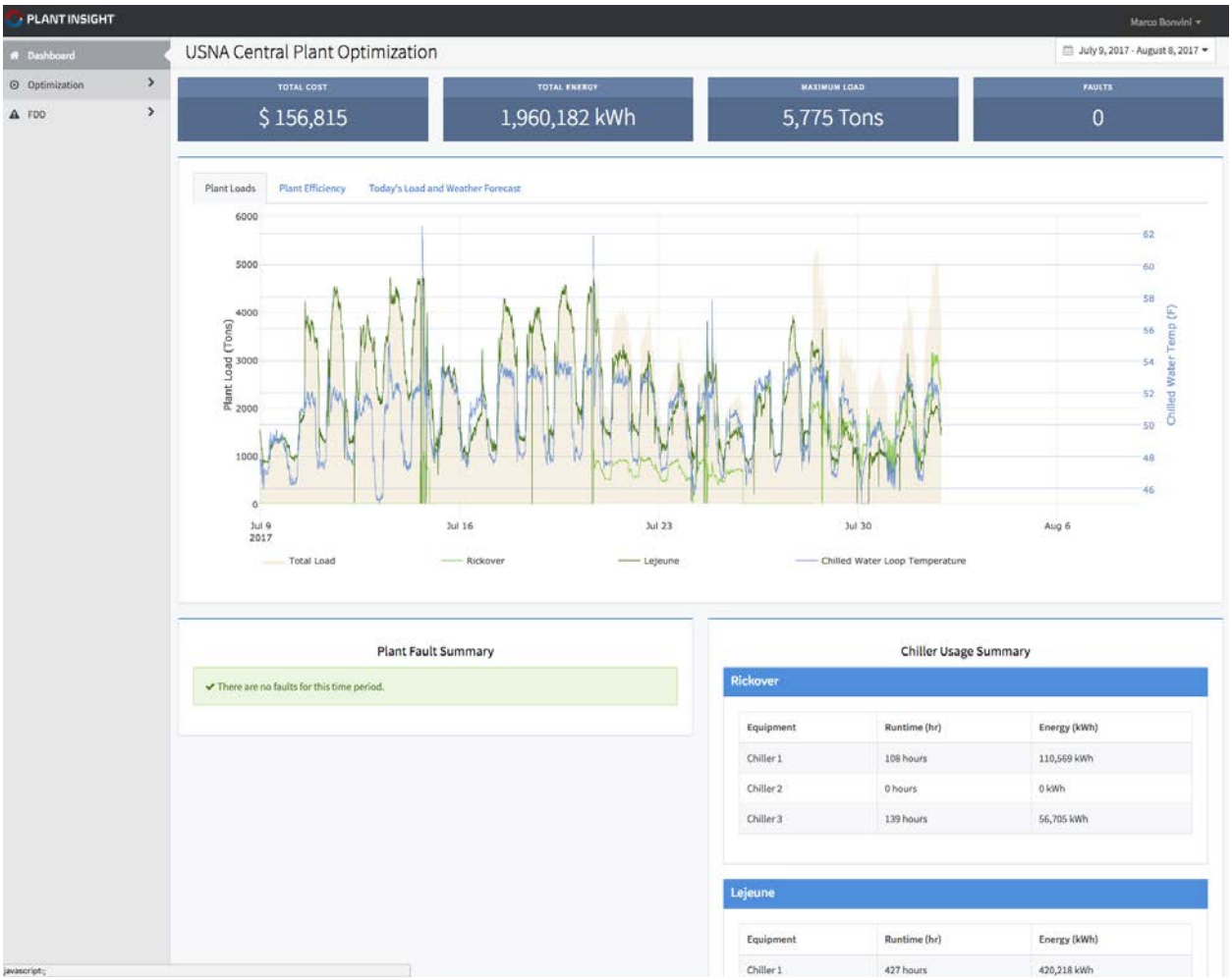


*Figure 1. Screen shot of the landing page of the PlantInsight tool*

The architecture of the PlantInsight Tool is shown in Figure 2 as a block diagram schematic. The green blocks indicate portions of the system that are located at the site, while the orange blocks represent remote components. Data from the meters and sensors at each cooling plant is transferred to the on-premise automation system (energy management and control system, or EMCS), which is accessed through an operator kiosk. Data from the site is pushed to a remote PostgreSQL database that is used to store data for access by the PlantInsight tool. The user accesses the tool through a browser-based JavaScript graphical front-end application that interacts with the back-end via a representational state transfer (REST) API.

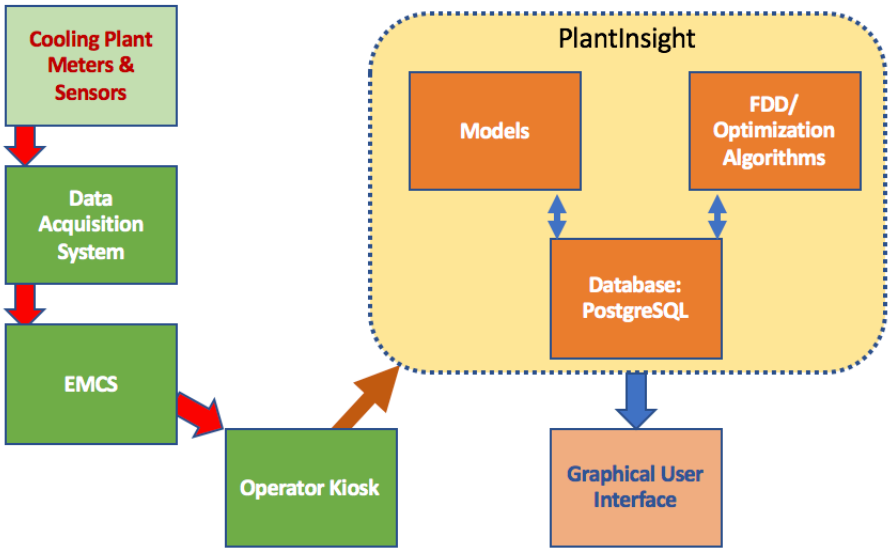


*Figure 2. Architecture of the PlantInsight tool for hybrid model-based and data-driven central plant diagnostics and optimization*

## 2.2 TECHNOLOGY DEVELOPMENT

Development of the PlantInsight tool comprised four primary elements: model construction and calibration, creation of FDD and optimization algorithms, architecture definition, and graphical user interface (GUI) development. The following subsections detail these elements.

### 2.2.1 Model Construction and Calibration

The physics-based modeling approaches that underlie PlantInsight's optimization and efficiency diagnostics are built using the Modelica language specification (Wetter et al. 2014) and Functional Mockup Interface (FMI) standard (Blochwitz et al. 2011). Modelica is an equation-based, object-oriented programming language for the modeling and simulation of physical systems. FMI is a standard way of packaging and interfacing physical system models to enable model exchange and co-simulation among different tools. Both Modelica and FMI are open standards, meaning that freely available, open source, and commercial tool chains—including model libraries, development environments, and compilers—can be built using them. The technological maturity of Modelica has been demonstrated in various industrial sectors, such as for the design of energy efficient vehicles (Deuring et al. 2011; Philipson et al. 2008), the improvement of air-conditioning systems for automobiles (Junior et al. 2009), the development of models of biochemical network systems (Wiechert et al. 2010), and the design of power plants (Razak 2010; Casella and Pretolani 2006; Alobaid et al. 2008). In the buildings industry, LBNL has been developing the Modelica Buildings Library (Wetter 2014).

The Modelica models that simulate the operation of the central cooling plant were developed using a diversity of information from the cooling plant design specifications, nameplate data, drawings, and trend-log data. Beginning with the design drawings, the plant configuration, components, and equipment were replicated in model form. The Modelica Buildings Library was used to build a representation of the specific central cooling system. In this case, the system included two interconnected chilled water plants called *Rickover* and *Lejeune.* To represent each plant, individual models of chillers, pumps, and cooling towers were created and then integrated as a single cooling plant model. Once the plant design was represented, manufacturer data, including nameplate values, chiller loading curves, and pump nameplate values, were used to quantify key equipment and component-level characteristics. Finally, the specific control sequences that are in use at the plant were embedded into the model. In-person site visits were necessary to compile all of the information needed for model creation, since not all information was readily accessible in digital form.

Figure 3 illustrates the chiller model for one of the chillers at the Rickover cooling plant. Here, solid blue lines represent the water pipes and the dashed lines are the paths for control signals and other inputs for the model, such as weather data and plant cooling load. This model uses the *Chiller.Electric.EIR* model from the Modelica Buildings Library (Wetter 2014). In this model, chiller power can be calculated for any loading and temperature conditions. Using the same conventions as in Figure 3, Figure 4 shows the model for one of the cooling towers, which uses the *CoolingTower.YorkCalc* model in the Modelica Buildings Library. In this model, the approach temperature (the difference between the leaving water temperature and the entering air temperature) was calculated using a purely empirical YorkCalc correlation[1] and the tower fan power was computed by a third-order polynomial regression.

Figures 3–6 illustrate the models that were created for the Rickover cooling plant. Similar models were created for the Lejeune plant.

[1] *Input Output Reference: The Encyclopedic Reference to EnergyPlus Input and Output.* https://energyplus.net/sites/default/files/pdfs/pdfs_v8.3.0/InputOutputReference.pdf

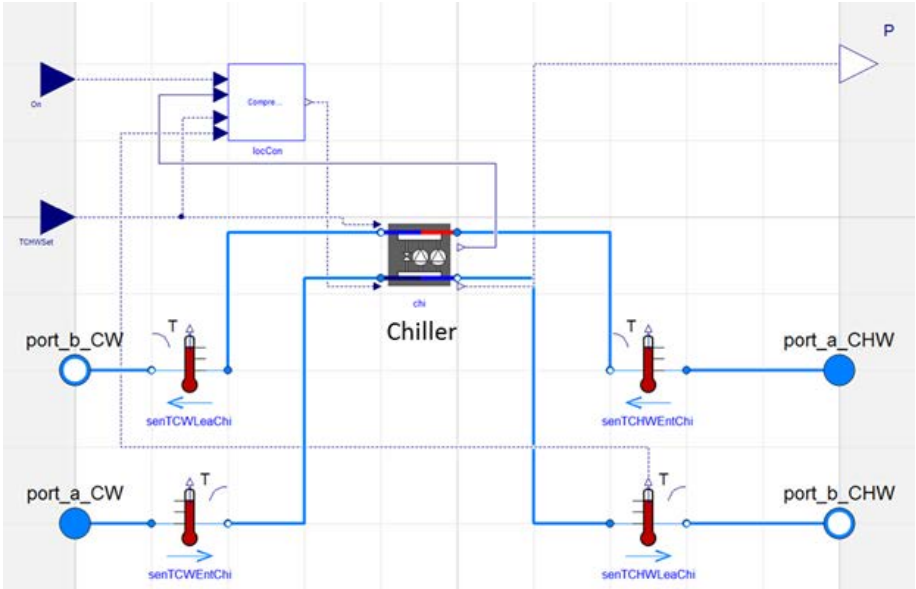


*Figure 3. Diagram of the Modelica model of the 2,500-ton chiller at the Rickover plant*

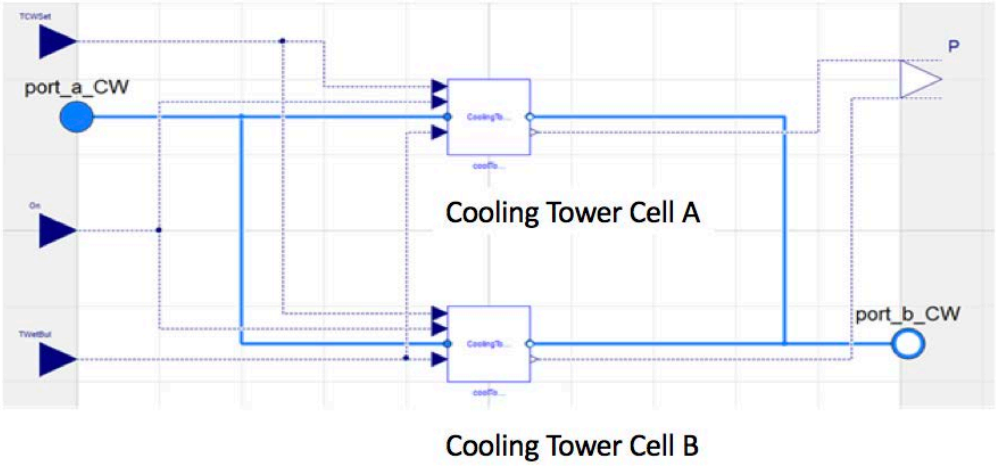


*Figure 4. Diagram of the Modelica model for a cooling tower at the Rickover plant*

Figure 5 shows the state model in the supervisory controller that is used to determine the chillers', cooling towers', and pumps' operational status according to the plant cooling load. When the plant cooling load is less than 1,250 tons, one small chiller is on; between 1,250 tons and 2,500 tons, one large chiller is on; between 2,500 tons and 3,750 tons, one large chiller and

one small chiller are on; and when the load is larger than 3,750 tons, all three chillers are on. Figure 6 shows the integrated model for the entire cooling plant.

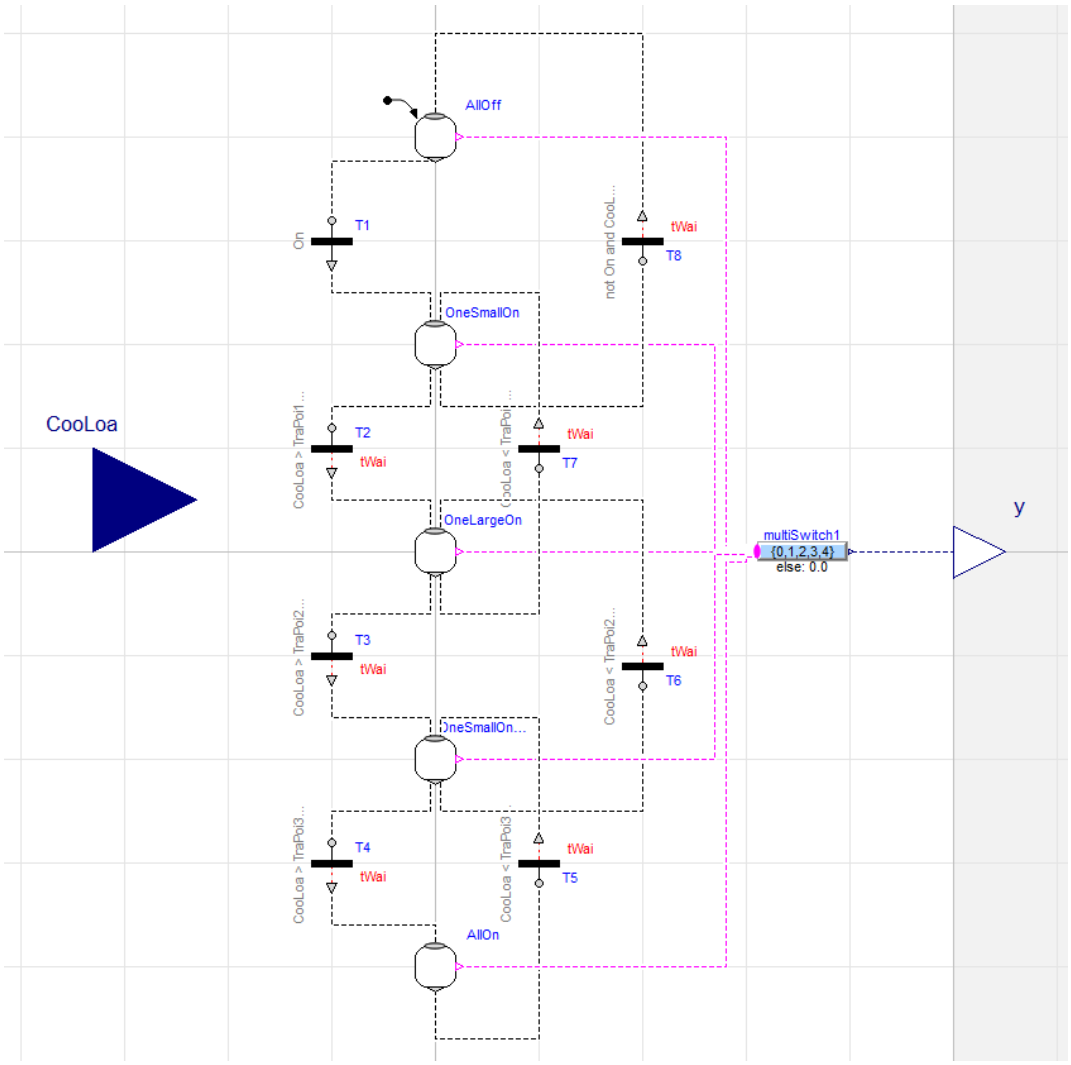


*Figure 5. Diagram of the Modelica model for chiller staging in the supervisor controller*

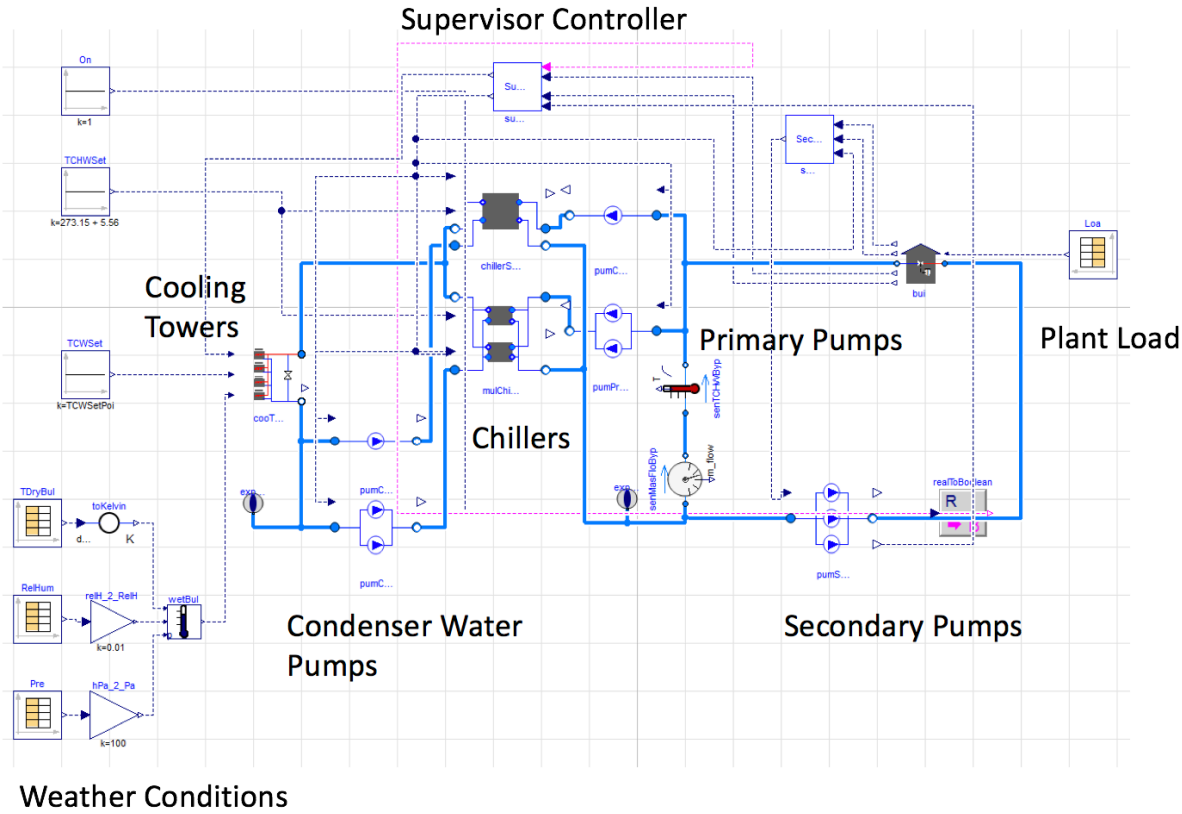


*Figure 6. Diagram of the system-level Modelica model for the Rickover cooling plant*

Once constructed, the chiller and cooling tower models were calibrated to the measured historic data from the cooling plant. The first step in calibration was to filter the historic data to that representing steady-state plant operation. From the steady-state data, we ensured as large as possible a range in the variation of each variable, for maximum coverage of operational conditions. Next, the GenOpt (Wetter 2001) optimization engine was used to search the (uncalibrated) model parameters to minimize the difference between the model outputs and the associated measured data.

The following criteria were used to determine if the chiller is under steady state or not:

1. The operating status of the chiller is on
2. The difference between chilled water returning and leaving temperature is greater than 2°C
3. The deviation of the measured leaving temperature of the chilled water from the setpoint is less than 0.3°C
4. The deviation of chilled water flow rate, condenser water flow rate, and chilled water leaving temperature from their average value in one hour should be within 10%

The following criteria were used to determine if the cooling tower is under steady state or not:

1. The operating status of the cooling tower is on
2. The deviation of condenser water leaving temperature from its average value in one hour should be within 0.5°C

The chiller and cooling tower models were calibrated using sixteen months of measured data (May 13, 2014–September 22, 2015). The goal of chiller calibration was to minimize the difference between the measured and simulated chiller coefficient of performance (COP) by tuning the coefficients of the equations that are used with the *Chiller.ElectricEIR* model to determine chiller power. The goal of tower fan calibration was to minimize the difference between the measured and the simulated fan power by tuning the coefficients of the fan curves used with the *CoolingTower.YorkCalc* model. The goal of tower leaving temperature calibration was to minimize the differences between the measured and the simulated tower leaving temperature by tuning the nominal wet bulb temperature and the nominal approach temperature. The objective functions are shown in the equations below.

$$J_{chiller} = \min\left(\int_{t_0}^{t_0+\Delta t} (COP_{mea}(t) - COP_{sim}(t))^2\right), \text{ for } t \in [t_0, t_0 + \Delta t) \quad (1)$$

$$J_{cooling_tower_power} = \min\left(\int_{t_0}^{t_0+\Delta t} (E_fan_{mea}(t) - E_fan_{sim}(t))^2\right),$$

$$\text{for } t \in [t_0, t_0 + \Delta t) \quad (2)$$

$$J_{cooling_tower_leaving_temp} = \min\left(\int_{t_0}^{t_0+\Delta t} (T_lea_{mea}(t) - T_lea_{sim}(t))^2\right),$$

$$\text{for } t \in [t_0, t_0 + \Delta t) \quad (3)$$

In these equations, $COP_{mea}(t)$ and $COP_{sim}(t)$ are the measured and simulated COP during the calibration period $[t_0, t_0 + \Delta t)$, $E_fan_{mea}(t)$; and $E_fan_{sim}(t)$ are the measured and simulated cooling tower fan power consumption during $[t_0, t_0 + \Delta t)$; and $T_lea_{mea}(t)$ and $T_lea_{sim}(t)$ are the measured and simulated temperature of condenser water leaving the tower. The variables involved in the calibration are listed in Table 1. Model parameters are values used in the model that are known a priori, and are specific to the equipment and plant design. The "goodness" of calibration for the chiller models was determined based on COP, and that of the tower models was based on the temperature of condenser water leaving the tower and fan power consumption. Calibration was deemed sufficient when more than 90% of the data points fell within a 10% error band.

*Table 1. Variables used in the model calibration*

| Plant Components | Calibration goal | Calibration inputs | Calibration tuning parameters |
|---|---|---|---|
| Chiller | Coefficient of performance (COP) | Compressor status (on/off)<br>Chilled water flow rate<br><br>Condenser water flow rate<br><br>Chilled water entering temperature<br><br>Temperature of the condenser water entering the chiller | Coefficients of the chiller operation curves |
| Cooling tower | Condenser water leaving temperature | Condenser water entering temperature<br><br>Outside air dry bulb temperature<br><br>Outside air relative humidity | Nominal approach temperature<br><br>Nominal wet bulb temperature |
| | Fan energy use | Fan speed ratio of each module | Coefficient of the fan operation curve |

The calibration results are described in detail in Section 6.4.

### 2.2.2 Optimization and FDD Algorithms

#### *2.2.2.1 Optimization Algorithm*

The optimization algorithm determines the most effective cooling tower condenser water temperature setpoint. The chillers' efficiency increases when the temperature of condenser water entering the chillers ($T_{cw,ent}$) decreases. On the other hand, reducing $T_{cw,ent}$ may increase the energy consumption of cooling towers. Therefore, there is an optimum condenser water temperature setpoint for cooling towers at which the total energy consumption of the chillers and the cooling towers is minimized. To determine the optimal condenser water temperature setpoint, the component models of multiple chillers, cooling towers, and pumps were packaged into a system model, as shown in Figure 6. The system model was run to predict the energy consumption under different condenser water setpoints. Optimization constraints, such as the desired cooling load, were also incorporated into the model. As with the calibration activity, GenOpt was used as the optimization engine. The optimization period can be set to any desired value, in the case of this work, ranging from one hour to one day. In the configuration of the PlantInsight tool, the optimization period was defined as one day, as recommended by plant staff. The full steps of the optimization routine are (1) predict plant cooling load and (2) find the optimal condenser water temperature setpoint.

(1) Predict Plant Cooling Load

To predict plant cooling load, we used a regression model that uses a linear combination of a bias, minute, hour, outside air temperature, and day of week (Equation 4).

$$Load_{Total} = \beta_0 + \beta_1 Minute + \beta_2 Hour + \beta_3 OAT + \beta_4 Day \quad (4)$$

The coefficients of the linear combination are trained by linear least squares on the previous year's data. Different coefficients are trained for each month. To predict the load for a given time, we obtained the forecasted outside air temperature from Weather Underground (www.wunderground.com) and used that, along with the prediction time and coefficients from the appropriate month to compute the plant load. To guard against unrealistic predictions, if the predicted load was outside of the range of loads used to train the specific month's model, then we used the previous or next month's model. Whether to use the previous or next month's model depends on if the predicted load is too high or too low and if the season is autumn or spring. If it is autumn and the predicted load is too high, the previous month's model is used; if too low, then the next month's model is used. For the spring months, the pattern reverses: if the predicted load is too high, then the next month's model is used; if it is too low, the previous month's model is used.

The final piece of load prediction was to split the total predicted load into loads for Rickover and Lejeune. The total predicted load was split to Rickover by a piecewise linear approximation as a function of total load, shown in Appendix B. This approximation was made based on previous measurements of the ratio of Rickover load to total campus load. The Lejeune load was taken as the remaining difference between the total load and the calculated Rickover load.

(2) Optimize Condenser Water Temperature Setpoint

The optimal condenser water setpoint was determined by solving the optimization problem defined in Equation 5 below (Huang and Zuo 2014). It was assumed that all the cooling towers are controlled by the same condenser water setpoint. Since the change of the condenser water setpoint does not impact pump operation, the optimization equation does not include the pump energy consumption.

$$\min\left(E\Big|_{t_0}^{t_0+\Delta t}\right) = min\left(\int_{t_0}^{t_0+\Delta t}(P_{ch}(t) + P_{tw}(t)dt)\right) \text{ for } t \in [t_0, t_0+\Delta t)$$

$$\text{with } P_{ch}(t) = f(T_{ch,ent}(t), Q^P(t), \overrightarrow{S_{ch}}(t))$$

$$\text{and } P_{tw}(t) = f(T_{wb}^P(t), T_{cw,set}(t_0), T_{cw,lea}(t), \vec{S}_{tw}(t))$$

$$\text{such that } T_{cw,set,L} \leq T_{cw,set}(t_0) \leq T_{cw,set,H} \quad (5)$$

In these equations, $E|_{t_0}^{t_0+\Delta t}$ is the total energy consumption of the chillers and cooling towers during the optimization period $[t_0, t_0 + \Delta t)$, $P_{ch}$ is the power of chillers, while $P_{tw}$ is the power of the cooling towers, $T_{cw,set}$ is the condenser water setpoint, $Q^P$ is the predicted cooling load, $T_{wb}^P$ is the predicted wet bulb temperature from a weather forecast, $\vec{S}$ is the state vector of the system (e.g., equipment operating status, water temperature in chiller condenser, and evaporator), and $T_{cw,set,L}$ and $T_{cw,set,H}$ are the low and high limits of the condenser water setpoint during $[t_0, t_0 + \Delta t)$.

The Modelica plant system models are used to calculate $E|_{t_0}^{t_0+\Delta t}$, with forecasted plant loads, outside air dry bulb temperature, outside air relative humidity, outside barometric pressure, and condenser water setpoint as inputs for each time interval over the time horizon of interest. GenOpt is used to solve the optimization problem by varying the condenser setpoint temperature for each time interval specified to find the minimum energy consumption over the time horizon. Specifically, the Hooke-Jeeves Pattern Search algorithm is used (Polak 1997). The minimum condenser water setpoint is either 16°C, as specified by the plant operators, or 4°C higher than the minimum outside wet bulb temperature forecasted over the time horizon. This 4°C temperature difference is known as the *cooling tower approach* and is implemented to ensure that the condenser setpoint temperature is achievable. The maximum condenser water setpoint is 28°C as determined by the plant operators. The conventional setpoint is 22.22°C.

#### *2.2.2.2 Fault Detection and Diagnostic Algorithms*

Two types of FDD algorithms are implemented in the tool. The first is the detection of cycling faults in the cooling tower fans and chiller compressors. The second is identifying efficiency faults in the chiller. The detection and diagnosis of chiller efficiency faults was developed and implemented in the development version of the tool, but was not included in the "live" version of the tool that was released to the site for day-to-day use in operations. The diagnostic component of this algorithm, which is based on clustering and decision tree analysis, is particularly critical to the overall utility to operators because detection of poor efficiency in and of itself is not actionable. However, due to numerous constraints, the diagnostic function could not be tested and vetted to the extent required, and therefore was not released in the operational version of the tool.

<u>*Cycling Faults*</u>

Tower fan cycling faults are detected using cooling tower variable frequency drive speed data (percentage of maximum speed), while chiller cycling faults are detected using chiller compressor current data (percentage of full load amps). For each, less than 10% is considered *off*, while greater than 10% is considered *on*. For each five-minute time interval being analyzed during the period of interest, the algorithm counts the number of fan or chiller transitions from on to off, or off to on, that occur in the hour surrounding the time interval; that is, 30 minutes before and after the time interval. If the number of transitions is greater than or equal to 10

(five cycles/hour) or 8 (four cyclers/hour) for the fan or chiller respectively, a fault is flagged for that five-minute time interval. As illustrated in
Figure 7, time periods of five minutes in which a fault has been flagged are then aggregated into *faulty intervals* if they persist for at least 90 minutes. Multiple faulty intervals are aggregated into a *faulty period* if they occur within two hours of each other. Otherwise, separate faulty periods result from the faulty intervals. Finally, energy wasted, money wasted, a fault description, type, and start and end time are calculated and stored.

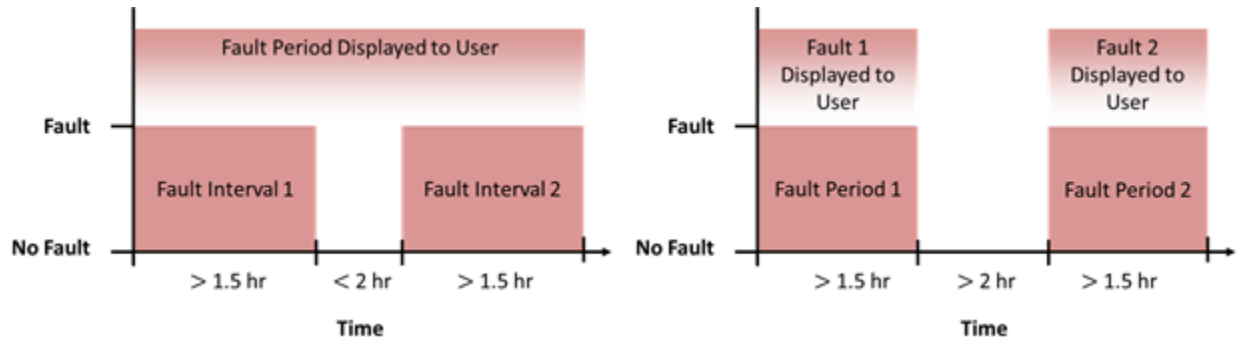


*Figure 7. Fault aggregation algorithm. A single faulty period is displayed to the user if two faulty intervals are within two hours (left). If the time interval is greater than two hours (right), two faulty periods are displayed.*

*Chiller Efficiency Faults*

Poor chiller efficiency is determined by comparing model-predicted COP with that estimated from measured data. Described in detail in Bonvini et al. (2014a and 2014b), the FDD algorithm is based on an advanced Bayesian nonlinear state estimation technique called Unscented Kalman Filtering (UKF) that estimates system states and parameters based on measured data and a model of the system (Julier and Uhlmann 1996). A back smoothing method is added to reduce the likelihood of false positives from operational variability and data uncertainties. Detecting poor chiller efficiency for a given time period occurs in the following steps for a given time period:

(1) Identify steady-state periods

Since the model of the chiller is calibrated during steady-state operation, it is important that the FDD algorithm only make comparisons between estimated performance from measurements and expected performance from models under these same conditions. Therefore, only time intervals with measured data meeting the criteria specified in the model calibration section are considered. The steady-state criteria are described in Section 2.2.1.

(2) Calculate and compare estimated and expected COP

For each time interval identified as steady-state, the actual COP is estimated using the UKF. Specifically, measured chilled water and condenser water return temperatures and mass flowrates are combined with chiller power measurements in an idealized chiller model based on temperature-dependent Carnot efficiency to estimate the COP. The expected COP is calculated using the calibrated chiller model with the measured chilled and condenser water return temperatures and mass flowrates, as well as the chilled water leaving temperature setpoint. The probability of a fault for the time interval is computed by first finding the normalized error between the estimated COP and the expected COP, using the standard deviation of the estimation as the normalization magnitude, as shown in Equation 6.

$$\epsilon_{norm} = \frac{COP_{expected} - COP_{estimated}}{\sqrt{2} \cdot \sigma_{estimated}} \tag{6}$$

Then, the probability of a fault based on that error is calculated as shown in Equation 7.

$$P_{fault} = \frac{1.0 + erf(\epsilon_{norm})}{2} \tag{7}$$

If the probability is higher than a threshold, then a fault is flagged for the time interval.

(3) Aggregate fault intervals

Faulty time intervals are checked to determine whether that they last for a minimum of 90 minutes. If they do not, then the fault is not flagged. Faulty *time intervals* occurring within two hours of one another are aggregated into a *faulty period*. Otherwise, separate faulty periods result from the faulty intervals. This is the same as the fault aggregation depicted in Figure 7 above. Finally, energy wasted, money wasted, a fault description, type, and start and end time are calculated and stored.

In the future, a clustering and decision tree analysis procedure could be implemented to provide further diagnostic insight. A procedure was developed to group detected faults based on the similarity of conditions under which they occur; similar instances are grouped, and summarized for presentation in the tool interface to support root cause diagnostics by the operator. First, a k-means clustering algorithm divides the observed faults into distinct operational conditions under which the faults can be characterized. Each k cluster corresponds to a diagnostic message for the operator. Once the clusters are identified, a human readable diagnostic message must be assigned. A decision tree is used to determine the boundaries in the feature space that distinguish between regular and faulty data, and thus identify them. The variables used in the decision tree, i.e., the feature space, are condenser and evaporator water temperatures, cooling load, electric

power, time of day, outside air temperature, and condenser and evaporator mass flow rates. The results of the decision tree are then sorted in order of importance to find the set that best describes the majority of the faulty conditions.

### 2.2.3 Architecture Definition

Figure 8 further details the schematic diagram first presented in Figure 2. PlantInsight is written in Python 2.7, and consists of three main components: the Django web framework, the model simulation and optimization EstimationPy Python packages, and a PostgreSQL relational database. The Django web framework serves the web pages and API calls, runs the data update routines to calculate derived data points, runs the models using EstimationPy, and runs the FDD/optimization algorithms. Within these algorithms, model simulations are run by Dymola dymosim files, optimizations are run by GenOpt, and fault detection and diagnostics use EstimationPy. Dymola is a Modelica development, compiling, and simulation program; GenOpt, developed by LBNL, is an optimization tool for building energy simulation programs; and EstimationPy is a Python package, developed by LBNL and used for state and parameter estimation of dynamic systems that conform to the Functional Mockup Interface (FMI) standard.

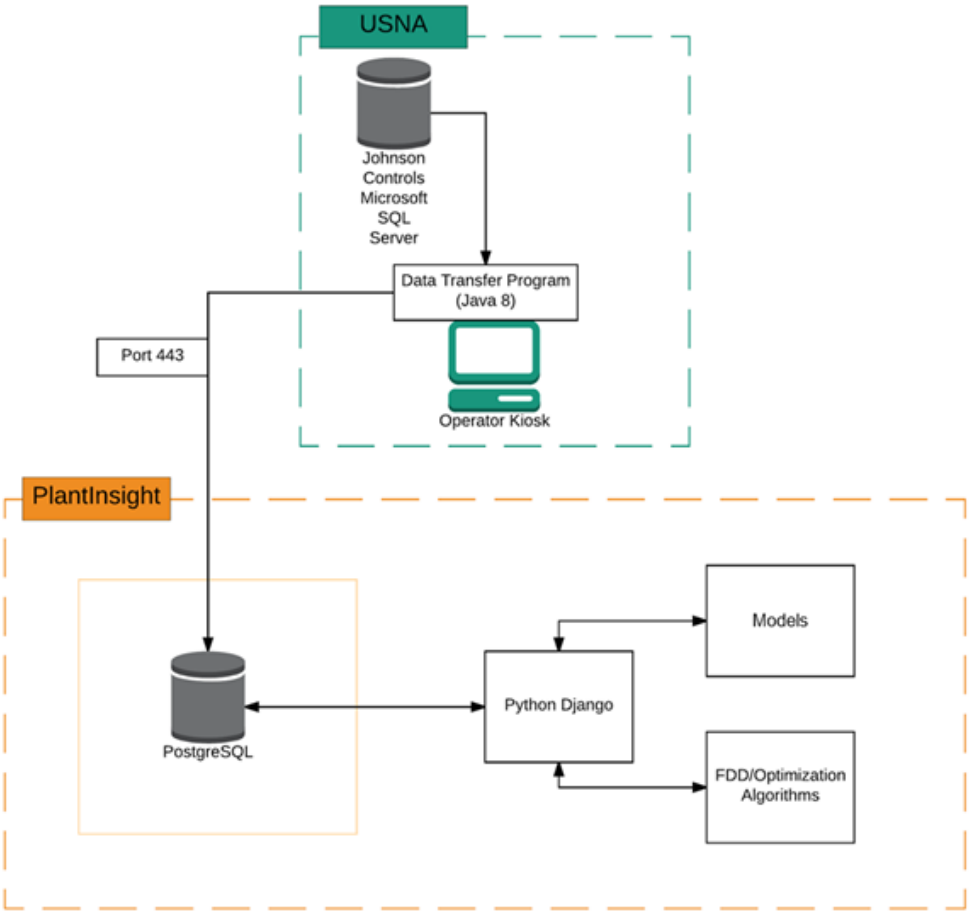


*Figure 8. Illustration of the Python, Django, and PostgresSQL components of PlantInsight, and data transfer from USNA*

The PlantInsight data originates from a Johnson Controls Historian database running Microsoft SQL Server located at the USNA site. A program was written in Java 8 to copy the data from the USNA SQL Server database to the PlantInsight PostgreSQL database, located at LBNL. The program was installed on an operator kiosk at USNA and scheduled to run daily at 8:00 AM PT. Automated routines on the PlantInsight system read in the new data, update its derived data points, run the models, then run the FDD/optimization algorithms.

### 2.2.4 GUI Development

To ensure that the tool would be of maximum utility to plant operators, design feedback was obtained iteratively, throughout development. The most important feedback that was integrated into the tool design and functionality is summarized in the following:

- *Add key performance indicators*: Primary chilled water loop temperature, and weather forecast are critical parameters that are tracked by the operations staff. In addition, staff also requested that the tool-predicted plant load forecast be added to the interface. Since these variables are tracked on a continual basis under existing operations, it was important that they be included in the PlantInsight tool. If excluded, the tool would be less likely to be integrated into daily management processes because it would lack the most valuable monitoring features that are included in the current EMCS. KPIs are displayed on the landing page, as shown in
- Figure 1.
- *Convert energy units to dollars*: While campus energy managers regularly track kilowatt-hours (kWh) and Btu, tons and dollars resonate more strongly with plant operations staff. Therefore, the impact of faults and optimal setpoints are represented in terms of utility costs. Operators and energy management staff were interested in two cost scenarios—savings gained from changes that are implemented (to communicate the value of the team's contributions to others in the organization) and the cost of not addressing changes (to facilitate approval of remedial actions and associated expenditures).
- *Limit the frequency of optimization*: Although the tool was initially configured to generate optimal setpoints each hour, the operations staff were not comfortable implementing changes more than once a day. More frequent changes were deemed impractical and risky. Over time, twice-daily changes may be integrated into operational routines to address overnight conditions. In addition, the predicted energy consumption with the optimal condenser water setpoint temperature is compared to the predicted energy consumption with the conventional setpoint, and if the savings are not significant (>1%), the conventional setpoint temperature is recommended.

Figure 9 shows the condenser water temperature setpoint optimization features in the tool. In the upper plot, the model-determined optimal setpoint is shown along with the conventional actual setpoint (in °F) for the upcoming day. The conventional setpoint is an annual constant under current operational strategies. The forecasted wet bulb temperature is also plotted. In the lower plot, for a time period specified by the user, the actual measured power (orange) and the predicted power that would have been consumed under the model-determined optimal condenser water temperature setpoint (green) is shown. This predicted optimized power is calculated as a percentage of measured power, where the percentage is calculated from the ratio of model-determined optimal power to model-determined baseline power. Therefore, if the optimal setpoint were actually implemented, the user would expect to see the actual measured power and optimal predicted power trends overlap.

*Figure 9. Screen shots of the condenser water temperature setpoint optimization features in PlantInsight: (Top) Optimal and conventional condenser water setpoints with predicted wet bulb temperature. (Bottom) Measured and predicted optimal power.*

Figure 10 shows the chiller efficiency fault detection and diagnostic features in the tool (not released in the live version of the tool). In the upper plot, the chiller efficiency curve is plotted with kW/ton on the y-axis, and cooling tons on the x-axis. In the bottom plot, a time series of detected efficiency faults is provided. A time series of the measured COP is overlaid with the model-predicted COP. When the two values diverge beyond a threshold size and probability, a fault is detected. Fault instances are aggregated and flagged for the user's attention, as described in Section 2.2.2.2.

*Figure 10. Screen shot of the chiller efficiency fault detection and diagnostic features in the PlantInsight tool for a fault-free period of operation*

Figures 11–13 show the tool's cycling fault detection features.

Figure 11 contains a summary overview of tower fan and chiller cycling fault detection results during the time period of April 24–27, 2016. The red box indicates that tower fan cycling fault was detected in Rickover Tower 1 Cell A. Figure 12 provides a drill-down of the hourly power (kW) measurements for the tower's faulting fan, where the period of cycling is highlighted in a pink box. A zoom-in plot of the higher-frequency data from this period in Figure 13 verifies that the fan was indeed cycling on and off every 5 to 10 minutes.

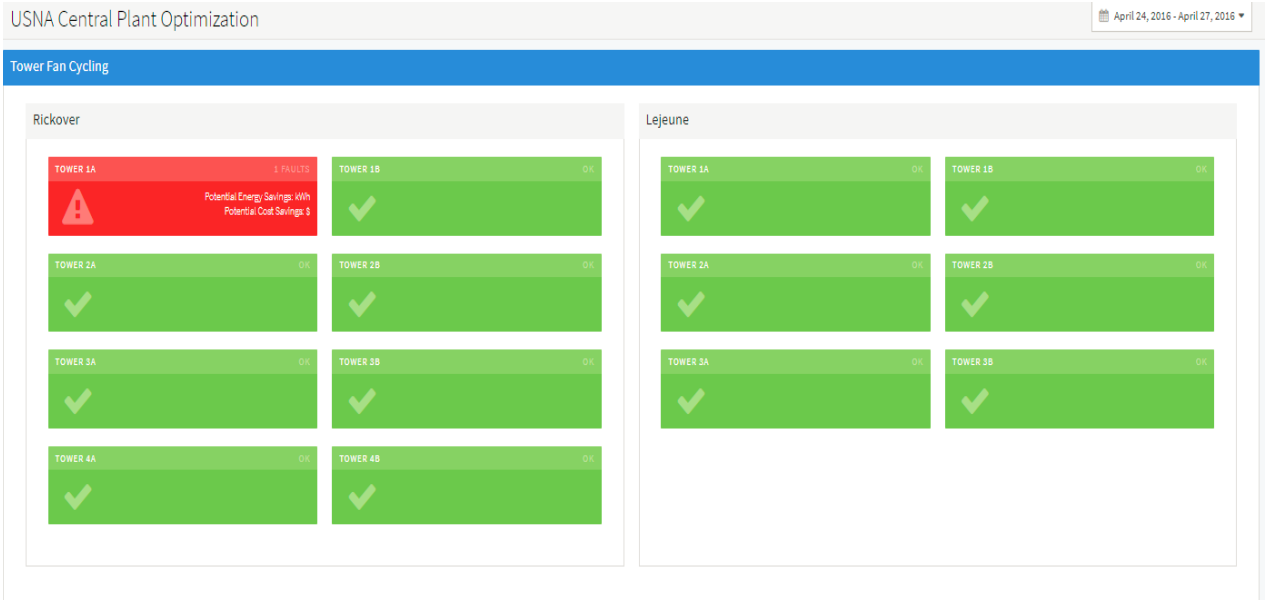


*Figure 11. Screen shot of the cycling fault detection results overview in the PlantInsight tool for a time period during which a tower fan cycling fault was detected*

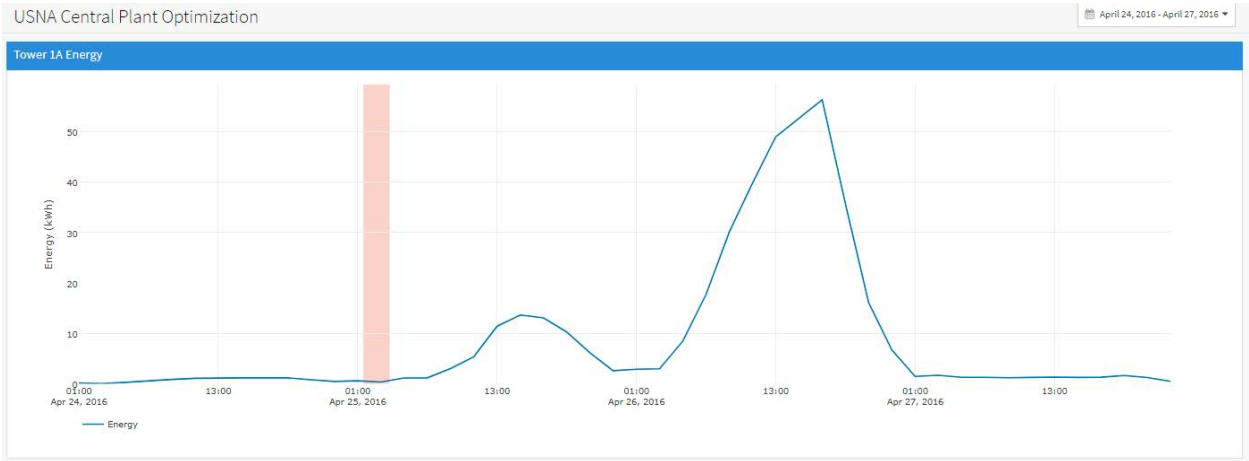


*Figure 12. Screen shot of the cycling fault detection "drill down" results for Rickover Tower 1 Cell A in the PlantInsight tool when a tower cycling fault was detected*

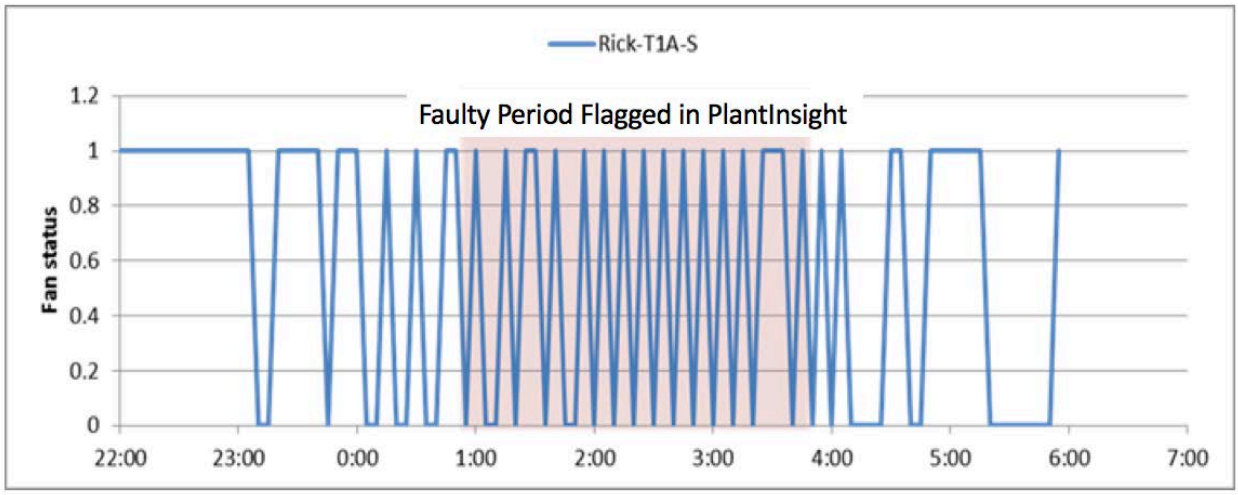


*Figure 13. Zoom-in of the data verifying the fan cycling detected in the PlantInsight tool*

## 2.3 ADVANTAGES AND LIMITATIONS OF THE TECHNOLOGY

In assessing the advantages and limitations of the technology we considered diagnostic and optimized control power, scalability, required expertise, maintainability, and contrast with approaches based purely on rule-based and data-driven techniques. Rule-based and data-driven approaches are diverse and quite varied, as are physics-based models and the use cases for which they may be deployed. Therefore, we present a general discussion, based on the current state of today's most readily available solutions.

*Diagnostic and optimized controls power:* Physics-based techniques remain a compelling direction for the continuous commissioning, optimization, and FDD systems of the future. One major advantage of physics-based models over data-driven models is the ability to extend them for retrofit analysis as well as those that focus on operational efficiency analysis. One can drop in new chillers, towers, or pumps and use the model for further analysis beyond the realm of prior historic operations. In addition, users can compare how the system *should operate* to how it has operated in the past. Accordingly, knowledge of the underlying physics holds potential to enhance diagnostic power. Model-based approaches are critical in the delivery of *holistic* strategies for advanced, efficient building controls. The buildings industry is only beginning to deliver energy-aware transactive controls and dynamic, anytime optimization. These capabilities will surely be needed in the buildings and energy supply systems of the future, and will require more sophisticated model-based representations of the underlying physics and engineering in the system.

*Required expertise:* Given the modeling tools available today, physics-based model construction is more labor-intensive and less scalable than rule-based and data-driven models. While non-physics-based approaches typically require tuning of key parameters, they are less likely to

require customization or rebuilding for each new building or system encountered. Moreover, if components change, retrofits are made, or control sequences are modified, physical models may require modification. It is possible to leverage whole-building reference models that provide a coarser representation of the building and its systems, however it is not clear that these offer sufficient resolution for reliable fault diagnostics and optimization. Depending on the specific modeling environment used, "stock" components may be available from preexisting libraries. However, the models must then be adapted for use with specific diagnostic algorithms. For example, in this work, the chiller model from the Modelica Buildings Library was adapted and modified for use in the state/parameter estimation phase of the efficiency fault detection algorithm. Model calibration requires a significant degree of specialized expertise in building modeling, operations, and building science. In general, however, it can largely be conducted with data that are commonly available from building control systems. As in the case of rule-based and data-driven models, the required data often need to be cleansed to fill gaps and filter extreme or erroneous values.

*Scalability and maintainability:* Cost-effective integration of control system data into analytics tools remains one of the most significant challenges to advancing the state of today's technology, whether model-based or data-driven approaches are employed. In principle it is possible, but in practice the associated cost and complexity often outweigh the benefits of the advanced analytics that require the data integration. Once the data are obtained, care must be taken to ensure that the models are being calibrated in a physically meaningful way. Auto-calibration routines that codify some of the expertise that is needed for successful calibration are being developed by researchers, and are beginning to be offered to the industry (Sanyal et al. 2014; Sun et al. 2016). However, calibration approaches must be matched to the application. For example, calibration of a model used for a chiller fault detection as it operates through dynamic and steady-state regimes may be quite different from that of a whole-building model that is used to determine faults in centralized HVAC systems. The questions of when to recalibrate and how to account for faults present in the calibration data are the subjects of ongoing research. Finally, one can consider the infrastructural aspects of delivering model-based approaches for use in continuous operational analytics. The infrastructural requirements for such systems do not present a practical challenge for scaled delivery. Cloud-based software services dominate today's solutions for operational analytics tools, precisely because of the cost-efficient, scalable, computational, and hosting flexibility they provide.

# 3.0 PERFORMANCE OBJECTIVES

Table 2 below provides a summary of the demonstration performance objectives, metrics, data requirements, success criteria, and results.

*Table 2. Performance objectives*

| Performance Objective | Metric | Data Requirements | Success Criteria | Results |
|---|---|---|---|---|
| **Quantitative Performance Objectives** | | | | |
| (1) Reduce Central Plant Electricity Use | Annual energy use, normalized for weather (kWh/year) | Time series plant energy data, and independent variables such as outside air temperature and relative humidity | At least 10% reduction compared to baseline cooling plant energy use | Objective achievable for ~6 months of the year; not achievable on an annual basis |
| (2) Reduce Central Cooling Plant Greenhouse Gas Emissions | Equivalent $CO_2$ emissions (metric tons) | Metered energy use before and after the demonstration, and regional emissions factors | 10% reduction compared to cooling plant baseline | Objective achievable for ~6 months of the year; not achievable on an annual basis |
| (3) System Economics | Simple and discounted payback for technology use | Costs: sensor hardware, sensor and software installation, model creating calibration, electricity use, model and software maintenance, operator training, and time to use tool | Simple and discounted payback in less than 5 years | Objective met with simple and discounted paybacks of 1.4 years |
| (4) Central Plant Model Calibration | Difference between model prediction and measurement | Central plant operational parameters, e.g., compressor status, chilled water flow rates, temperatures, weather conditions, fan speed, etc. | Difference between model-predicted and measured parameters less than 10% for 90% of data points | Objective met for 3 of 6 chillers and 10 of 10 cooling tower cells |
| (5) Latency in Data Transfer Between Database, and GUI | Latency (milliseconds) | Measured time to transfer data between the tool's components | Near-zero latency, in data transfer between GUI and database, i.e., <500 milliseconds | Objective superseded by Performance Objective 6 |

| Qualitative Performance Objectives | | | | |
|---|---|---|---|---|
| (6) User Satisfaction | Qualitative measures of satisfaction with the enhanced EIS | Pre- and post-installation interviews with operators | Equal or improved satisfaction relative to existing operational tools | Objective met |

The following text describes each of the six performance objectives in Table 2 in further detail and includes a discussion of obtained results.

**1. Reduce Central Plant Electricity Use:** Reduce the total electricity consumed over the course of one year at the central plant (kWh/year) by 10% with respect to baseline operations.

*Purpose:* Improving the energy efficiency of the central plant increases energy security and reduces site operating and maintenance. It also reduces total GHG emissions associated with plant operations.

*Metric:* The difference between annual energy consumption with the baseline operating conditions and annual energy consumption resulting from optimized operation, as calculated by annual simulations of both plant operation strategies.

*Data:* Measured cooling load for each central plant and measured weather conditions at the demonstration site.

*Analytical Approach:* Energy savings were determined by the difference between simulated annual energy consumption with and without use of the tool. Specifically, the baseline energy consumption was determined through daily simulations of each of the two plants' energy consumption using measured cooling load, measured weather conditions, and the conventional condenser water setpoint of 22.2°C as inputs. The optimized energy consumption was determined through daily optimization of each plant's condenser water setpoint based on measured cooling load and measured weather conditions, with subsequent simulation using the optimized setpoint. This approach achieves a maximum-achievable energy savings since the load is perfectly known in the optimization of the setpoint.

*Result:* The results of the analysis indicate that daily energy savings greater than 10% are obtainable for approximately six months of the year; mainly during the winter season. However, for the year as a whole, much lower energy savings of 1.38% (434,785 kWh, $30,435) are obtainable. While the performance is unsatisfactory compared to the overall performance objective, a number of valuable insights emerged from the analysis, including the effects of seasonal wet bulb temperatures and the relative power consumption of the chiller compared to the cooling tower fans. Larger annual savings are possible in drier climates. Further details are provided in Section 6 of this report.

**2. Reduce Central Cooling Plant Greenhouse Gas Emissions:** Reduce the equivalent carbon dioxide ($CO_2$) emissions associated with the electricity used to run the central cooling plant over the course of one year (metric tons) by 10% with respect to baseline operations.

*Purpose:* Improving the energy efficiency of the central plant helps to achieve the DoD's overall energy and water goals of reducing GHG emissions from non-vehicle sources. Additionally, source reduction, as opposed to emission containment, is cost-effective, highly scalable, and a transferable approach to reducing GHG emissions at most military installations.

*Metric:* The difference between annual expected tons of GHG emissions with the baseline operating conditions and annual expected tons of GHG emissions resulting from optimized operation, as calculated by annual simulations of both plant operation strategies.

*Data:* Measured cooling load for each central plant, measured weather conditions at the demonstration site, and regional emissions factors.

*Analytical Approach:* Calculated energy savings from Performance Objective 1 were converted to tons of avoided GHG emissions regional emission factors for the Annapolis area. This conversion factor is obtained from ENERGY STAR's Portfolio Manager Greenhouse Gas Emissions Technical Reference Guide (ENERGY STAR 2017). The factor is obtained by assuming indirect emissions, since electricity is produced by the utility off-site, and using the U.S. Environmental Protection Agency's (EPA's) Emissions & Generation Resource Integrated Database (eGRID) for August 2017 in the RFCE (mid-Atlantic) region, which includes Maryland. The conversion factor is 110.93 kg $CO_2$/MBtu (378.5 kg $CO_2$/kWh).

*Result:* With a single conversion factor applied, the results of the analysis are the same as the energy performance objective, in terms of percent savings. That is, greater than 10% daily GHG emissions savings are achievable throughout six months of the year, mainly the winter season. However, only 1.38% (181,403 tons) *annual* savings are possible in USNA's more humid climate, for the same reasons as described for the energy savings performance objective.

**3. System Economics:** The demonstration technology can meet simple and discounted payback hurdles of less than five years.

*Purpose:* Assessment of system economics based on standard capital budgeting metrics provides a gauge for determining financial feasibility.

*Metric:* Simple and discounted payback based on the cost of implementing and using PlantInsight compared to the baseline case of no optimization.

*Data:* All data required to evaluate system economics, e.g., utility costs under both scenarios, hardware and software purchase, installation, and calibration, regular

maintenance, and operator labor and training time. All input values and assumptions are provided in detail in Section 7 of this report.

*Analytical Approach:* Calculations were conducted in accordance with the principles of the NIST BLCCA process, as published in NIST Handbook 135 (Fuller and Petersen 1996). The BLCC calculator was used to determine the benefit of the proposed demonstration technology relative to the "do-nothing" case. Section 7 provides details of the life-cycle cost analysis, including how the elements of the cost model were mapped to the inputs required within the BLCC calculator.

*Result:* The analysis showed that simple and discounted payback can be met in 1.4 years, well within the five-year target that was established. Further details are provided in Section 7 of this report.

**4. Central Plant Model Calibration:** Calibrate the chiller and tower models so that the difference between model-predicted and measured parameters are less than 10% for 90% of the data points.

*Purpose:* Ensure that the model developed to simulate the central plant is representative of the central plant's actual physical performance.

*Metric:* The difference between model predictions and measured data from central plant operations.

*Data:* Chiller compressor status, chilled water flow rate, condenser water flow rate, chilled water entering temperature, chilled water leaving temperature setpoint, condenser water entering temperature, nominal power, energy use; tower condenser water leaving and entering temperature, fan speed, nominal power, and energy use; outside air dry bulb temperature and relative humidity.

*Analytical Approach:* Data from the plant were measured and compared to model estimates over a 16-month period (5/13/2014–9/22/2015).

*Result:* The soundness of the calibration process was confirmed, and the majority of systems were calibrated to meet the performance objective: three of six chillers and all ten of the fourteen cooling tower cells for which the required data were available. However, data availability and possibly reliability prevented successful calibration of *all* chillers and tower cells. For the chillers, calibration was challenged by the limited volume of data representing full-capacity operation, and perhaps by inaccurate chilled water temperature sensor data, or faulty operations underlying the data. For the cooling tower cells, key calibration inputs were not available from the historical set of measurements from the site; the data were either not reporting correctly (constant zero values) or of poor quality. Further details are provided in Section 6 of this report.

**5. Latency in Data Transfer Between Database and GUI:** Design the tool for near-zero (<500 millisecond) latency in data transfer between the user interface and the database.

*Purpose:* Ensure that results from the FDD and operational optimization can be displayed to the operator without delays that adversely affect usability.

*Metric:* Data "travel time" between tool components.

*Data:* Measures of time to transfer data between critical interfaces in the PlantInsight tool.

*Analytical Approach:* Apply to PlantInsight utilities that are designed for software developers to measure latency and are compatible with the specific architecture and coding of the tool.

*Result:* This performance objective was superseded by Performance Objective 6, which encompassed overall user satisfaction relative to existing operational tools used at the site. The original target was 500 milliseconds, as the midpoint between the 0.1 second threshold of perceived instantaneousness, and the 1.0 second threshold of maintaining a user's perception of operating directly on data. Building energy and operational applications (and other business applications) often feature longer latencies, and 10 seconds is recognized as the limit for keeping a user's attention focused. In PlantInsight, latency in the GUI is largely driven by the user-selected time history of analysis. Going farther back in time over longer time horizons increases the time required to display results and data plots. However, operators tend to use the tool non-continuously, with a focus on recent operations. Throughout the demonstration, system responsiveness was never mentioned (positively or negatively) by users of the tool.

**6. User Satisfaction:** Evaluate whether the demonstration technology offers equal or improved satisfaction relative to existing operational tools.

*Purpose:* Determine the extent to which the demonstration technology meets the needs of site operational staff with respect to their existing set of energy management tools.

*Metric:* Qualitative measures of satisfaction based on survey/interview questions.

*Data:* Operator responses to survey questions.

*Analytical Approach:* A survey instrument (see Appendix C) was developed to compare and contrast features and capabilities, identify those with the highest value to site operational staff, and identify improvements; the central chilled water plant manager and lead operator (primary users of the demonstration technology) were interviewed to obtain responses for evaluation.

*Result:* This performance objective was met; the demonstration technology was to provide equal or improved user satisfaction relative to the tools currently in use at USNA. Further details are provided in Section 6 of this report.

# 4.0 FACILITY/SITE DESCRIPTION

The technology demonstration was conducted at the United States Naval Academy (USNA). The technology was implemented across the two central plants, Rickover and LeJeune, that serve the campus-wide chilled water (CHW) loop.

The USNA was selected based on the following desired site characteristics, deemed most critical to ensuring a good fit with the technology, and its implementation requirements:

- Installation staff prepared to integrate advanced methods into regular operations routines
- A central HVAC plant with modern control systems and robust trending capability
- Advanced metering of sufficient totality to determine energy saving impacts of improved HVAC operations.

## 4.1 FACILITY/SITE LOCATION AND OPERATIONS

The USNA is located in Annapolis Maryland, and therefore operates within mixed-humid ASHRAE Climate Zone 4A. This implies a significant indoor cooling demand. This fact is especially relevant because the proposed demonstration focuses on the improving the operational efficiency of USNA's central cooling plant. The cooling plant is split into two separate buildings, and serves a diverse set of buildings, including traditional office spaces, classrooms, libraries, gymnasiums, laboratories, a small data center, and other university buildings. Figure 14 shows a campus map with the location of the cooling plant facilities and the buildings they serve.

The plant is relatively new (constructed in 2006) and represents the current state of efficient design practice. The plant management staff uses the plant building automation system (BAS) to trend the standard operational parameters that are leveraged by the PlantInsight tool, and it contains a good degree of monitoring and measurement. USNA shares many common characteristics with other DoD installations.

*Figure 14. Map of the U.S. Naval Academy. The central plants serving the campus chilled water loop are located in Lejeune (south end of campus) and Rickover (north end of campus).*

## 4.2 FACILITY/SITE CONDITIONS

The cooling plant is split into two separate buildings and comprises four 2,500-ton York chillers, two 1,250-ton York chillers, and seven two-cell cooling towers. The Rickover plant, which is used for the majority of the year, contains two 1,250-ton chillers, one 2500-ton chiller, and four two-cell cooling towers. The Lejeune plant contains three 2,500-ton chillers, and three two-cell cooling towers.

Figure 15 shows images of the Lejeune cooling towers and one of the chillers. The 2,500-ton chillers at the plant have two compressors, while the 1,250-ton chillers have one compressor each. The central chilled water loop is operated in a primary/secondary pumping arrangement with each plant. Variable frequency drives are outfitted on each cooling tower fan and secondary chilled water loop pump. Primary chilled water loop pumps and condenser water pumps do not have variable frequency drives. The plants use a Johnson Metasys® BAS. USNA energy management staff report that the campus HVAC operates during typical "campus" operating hours but can run long hours to accommodate students during exam weeks or other high-activity times.

*Figure 15. Lejeune plant cooling towers (left), chillers and pump (right)*

The primary loop pumps are operated as follows. Each pump is associated to a specific chiller and operates at nominal speed if the chiller is designated to turn on. One backup pump is available for chiller during operation. For example, PCHP-1 and -2 are associated with the 2,500-ton chiller in Rickover with one operating at a time and the other for backup, while PCHP-3 to -5 are associated with either 1,250-ton chiller in Rickover, with two operating at a time and the third for backup. The pumps are staged based on minimum runtime. The secondary loop pumps each have variable frequency drives and are controlled to maintain the prescribed differential pressure setpoint across the campus loop. The condenser pumps are operated similarly to the primary pumps.

The cooling plant is operated to provide campus loop chilled water at 42°F +/- 2°F (adjustable). Figure 16 below illustrates the plants' configuration in relation to this loop. Each plant is operated in a seasonal configuration. During winter months (commonly November to April), the Lejeune plant is decommissioned, and only the Rickover plant provides cooling to the campus by running one of the two 1,250-ton chillers at a time, with one designated cooling tower. In non-winter mode, the two plants (Rickover and Lejeune) are operated to satisfy the cooling load requests according to staging sequences as follows. Once the cooling load surpasses the capacity of the single 1,250-ton chiller, the Rickover 2,500-ton chiller begins to operate, while the original (1,250-ton) chiller is de-energized. When the load rises above the capacity of the 2,500-ton chiller, the 1,250-ton chiller with the lowest runtime commences operation, together with the 2,500-ton machine. Upon continued rise of the cooling load above 3,750 tons, the operation is switched to the Lejeune plant. Personnel may decide to operate both plants simultaneously under certain circumstances. The transition and the coordination between the two plants is partially assisted by operators. Finally, cooling towers are staged on/off according to minimum runtime and to maintain a nominal condenser water temperature of 72°F +/- 2°F (adjustable). Cooling tower fan speeds are modulated to maintain fine control of the setpoint.

Note that this condenser water setpoint is the optimization variable of interest, as described in Section 2.

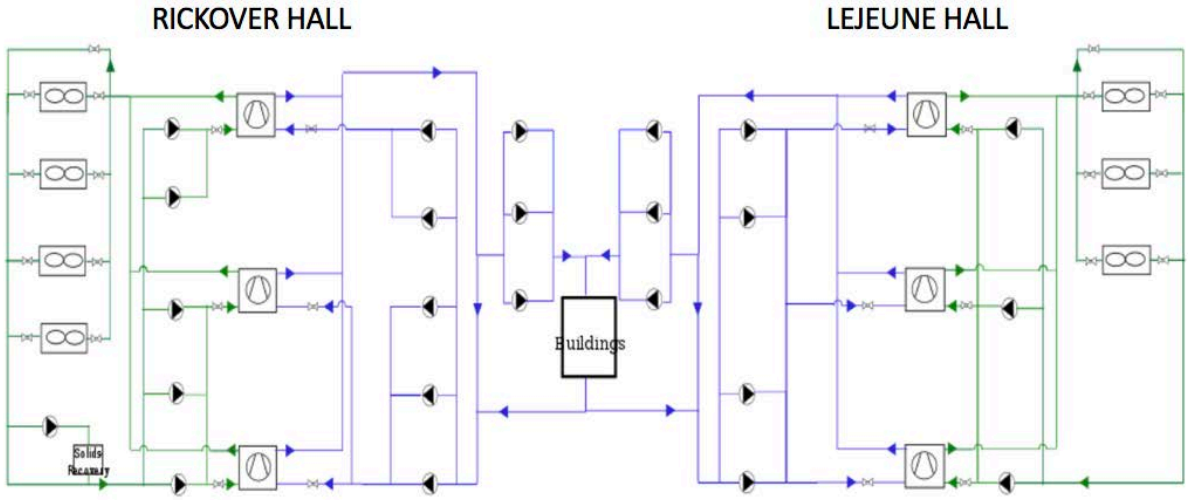


*Figure 16. Configuration of the USNA cooling plants and the chilled water loop*

# 5.0 TEST DESIGN

## 5.1 CONCEPTUAL TEST DESIGN

The USNA technology demonstration was conducted in three phases. First, design wireframes and an alpha version of the PlantInsight optimization and diagnostic tool was developed to ensure conceptual alignment with existing operational practices, and to obtain early design feedback. This alpha version interfaced with a static database of historical operational data from the facility.

In the second phase, we connected operational data with a beta version of the tool and conducted troubleshooting and refinement to ensure integrity of all software interfaces and components of the tool. We also conducted vetting of the diagnostic and optimization algorithms. In the third phase, we released the first version (v1) of the tool for operator use and began tracking its performance. Throughout the demonstration, operational data were collected and used for a variety of development, testing, and verification processes, including model training and calibration, algorithm vetting, visualization in the tool's GUI, energy baselining, and performance assessment.

To frame the demonstration according to classical experimental constructs, the demonstration design can be expressed as follows:

> *Hypothesis:* The use of the hybrid physics-based and data-driven optimization and fault detection tool will reduce electricity use (and associated GHG emissions) in a chiller-based central cooling plant. These reductions can be achieved in a cost-effective manner with acceptable user satisfaction.
>
> *Independent variable:* Installation and use of the PlantInsight tool.
>
> *Dependent variables:* Electricity use at the central plant, plant utility expenditures, cost of software and sensor hardware, and user experience.
>
> *Controlled variables:* Central plant configuration, electricity tariff and rates, weather and climate conditions. Controlled variables are incorporated in the modeling and analysis to improve the likelihood that results of tests reflects actual performance at USNA and that they are transferable to expectations at other military sites.

## 5.2 BASELINE CHARACTERIZATION

The technology demonstration evaluated three categories of performance objectives:

1. *System economics, energy and greenhouse gas reductions,* which require a rigorous quantitative baseline characterization.

2. *Model calibration* and *system latency*, which are absolute measures that do not require comparison relative to a baseline.
3. *User satisfaction*, which is a qualitative measure that was assessed relative to a baseline comprising the existing technologies used in by the operations staff, using a survey and interview instrument.

Baseline energy use and GHG emissions were characterized using measured cooling load at each plant, measured weather conditions at the site, and the conventional condenser water setpoint temperature of 22.2°C as inputs in the plant simulation models. The simulated electricity consumption of each plant includes chiller compressors and cooling tower fans.

Baseline conditions for the evaluation of system economics are detailed in Section 7.

## 5.3 DESIGN AND LAYOUT OF TECHNOLOGY COMPONENTS

The primary components of the demonstration technology, PlantInsight, were described in Section 2 and illustrated in Figures 2 and 8. Data from meters and sensors at the USNA's two central cooling plants is stored locally in the Johnson Controls Microsoft SQL server. These data are accessed by operational staff through the "operator kiosk." The kiosk is located in a different facility on the USNA campus than either cooling plant.

The PlantInsight tool is located on a server at LBNL, and accessible to USNA via web browser. Site data required for PlantInsight is pushed to LBNL using secure port 443 and a data transfer program installed on the kiosk.

The location of the Rickover and Lejeune cooling plants on the USNA campus is shown in Figure 14 in Section 4.1. Schematic diagrams of the cooling plants and the location of selected measurement points used in the demonstration are provided in Figures 17–20 below.

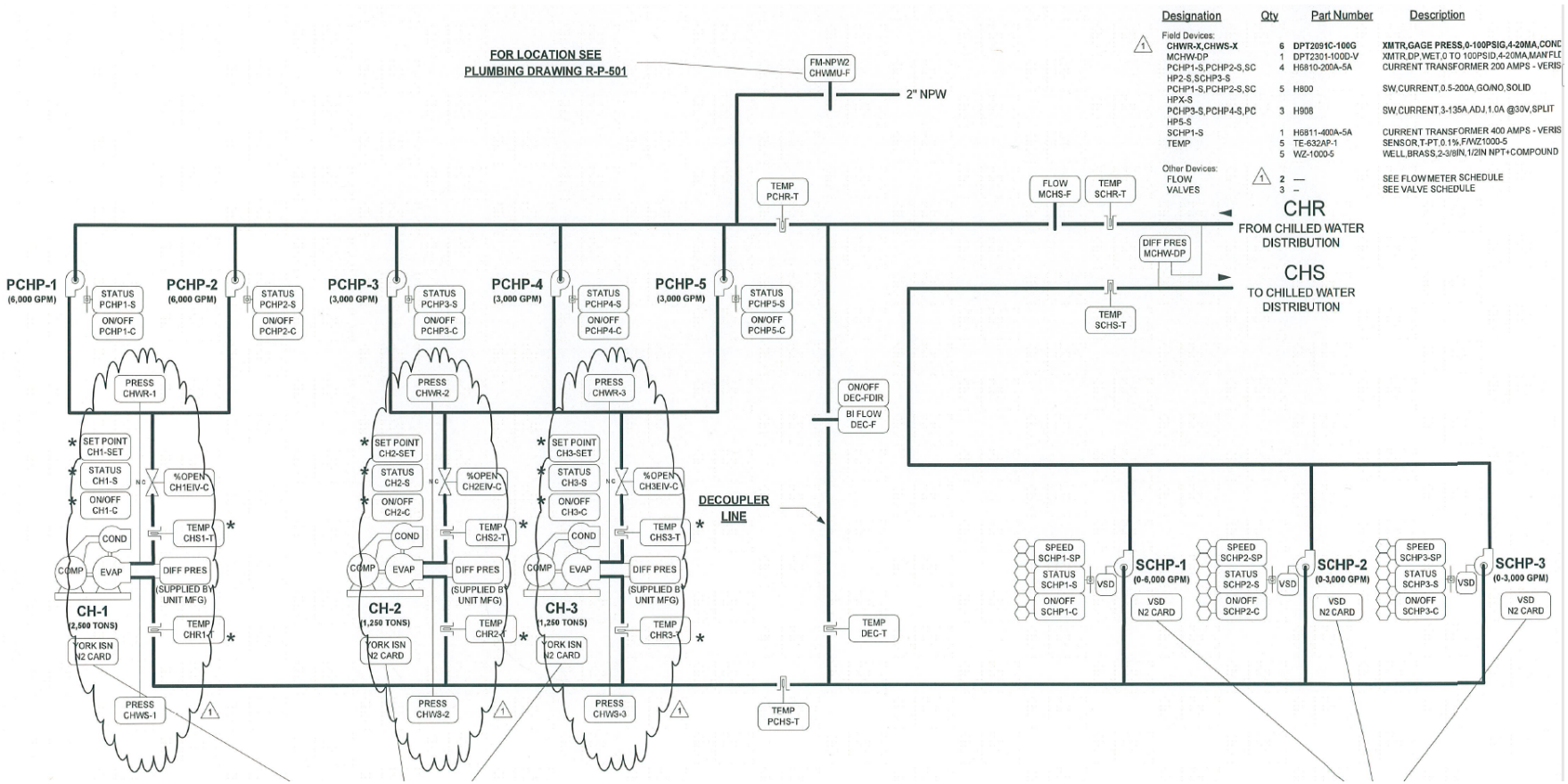


*Figure 17. Schematic diagram of the Rickover plant chilled water system*

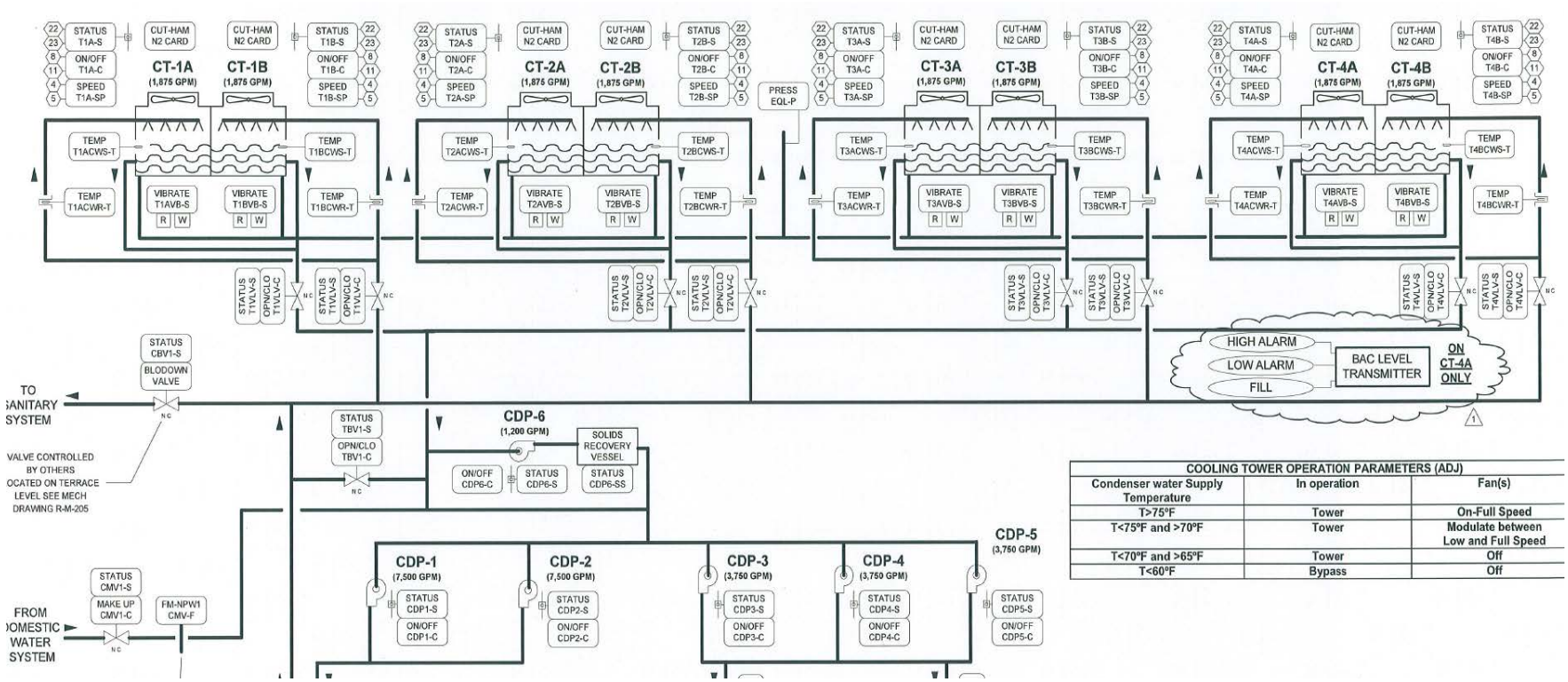


| COOLING TOWER OPERATION PARAMETERS (ADJ) | | |
|---|---|---|
| Condenser water Supply Temperature | In operation | Fan(s) |
| T>75°F | Tower | On-Full Speed |
| T<75°F and >70°F | Tower | Modulate between Low and Full Speed |
| T<70°F and >65°F | Tower | Off |
| T<60°F | Bypass | Off |

*Figure 18. Schematic diagram of the Rickover plant condenser water system*

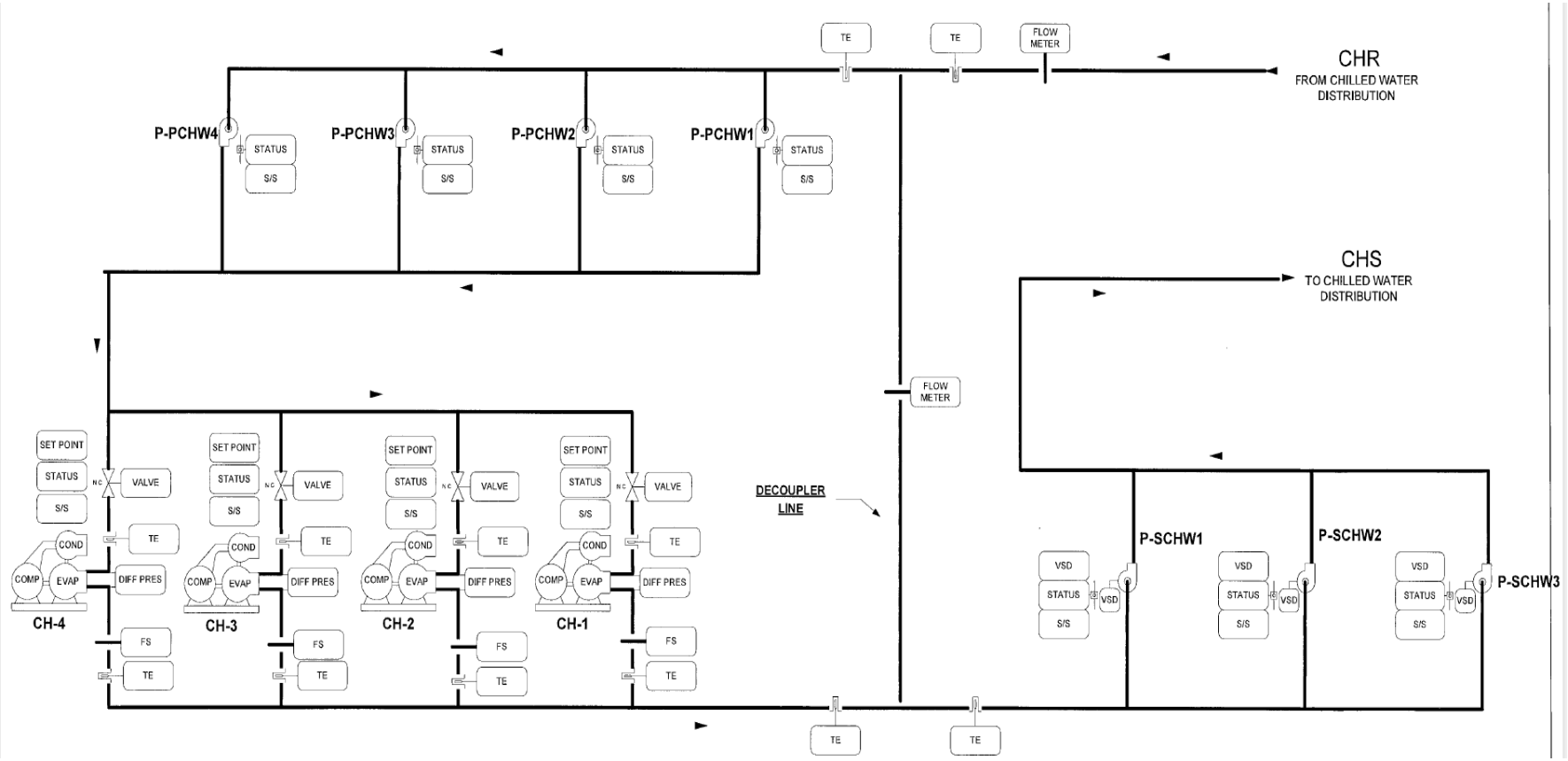


*Figure 19. Schematic diagram of the Lejeune plant chilled water system*

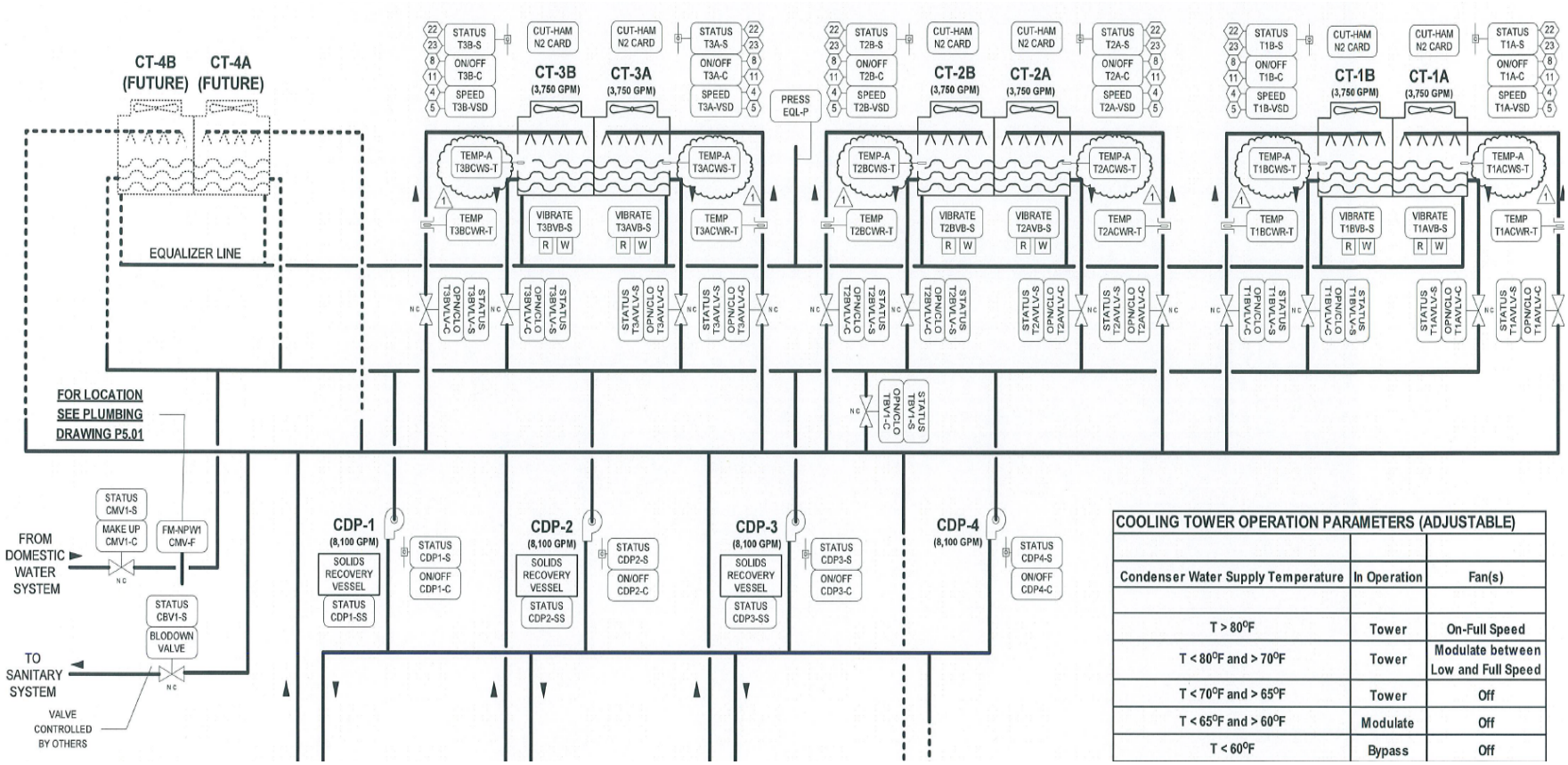


| COOLING TOWER OPERATION PARAMETERS (ADJUSTABLE) | | |
|---|---|---|
| | | |
| Condenser Water Supply Temperature | In Operation | Fan(s) |
| | | |
| T > 80°F | Tower | On-Full Speed |
| T < 80°F and > 70°F | Tower | Modulate between Low and Full Speed |
| T < 70°F and > 65°F | Tower | Off |
| T < 65°F and > 60°F | Modulate | Off |
| T < 60°F | Bypass | Off |

*Figure 20. Schematic diagram of the Lejeune plant condenser water system*

## 5.4 OPERATIONAL TESTING

Over the duration of the project operational testing was delayed several times due to: (1) a need to change demonstration sites, (2) changes in NDW facility/energy management technologies with which PlantInsight would be integrated, and (3) modifications to NDW contracts and services that resulted in LBNL providing GUI development and data integration solutions. Given these challenges, the demonstration could not have been successful without the unfailing, dedicated support and collaboration of NDW and USNA staff.

The phases and dates of development and operational testing are summarized below:

> 2012: Project launch at Washington Navy Yard (WNY); central plant information and data acquisition; Demonstration Plan development and approval.
>
> 2013: Early model development for WNY; integration plan to deliver PlantInsight capabilities through NDW's EnergyICT meter analytics system; demonstration site relocation due to WNY shooting incident.
>
> 2014: Update of Demonstration Plan to reflect new location at USNA; central plant information and data gathering for new site; NDW recommendation to deliver PlantInsight through the IBM operational platform; wireframe mockups of PlantInsight delivered to NDW, IBM, and USNA staff for early design testing and feedback.
>
> 2015–2016: NDW recommendation to untether PlantInsight from IBM platform; reassignment of GUI implementation and tool hosting to LBNL.
>
> 2016–2017: Alpha version released for testing, via integration to a static mirrored database; troubleshooting and development of code to establish continuous data access from USNA to LBNL database; features updated based on user feedback. Beta released with live data updates and used for further testing algorithm vetting; iterative hardening based and enhancement. Full-fledged in-situ operational testing including implementation of optimized setpoints recommended by the tool.

## 5.5 SAMPLING PROTOCOL

The Johnson Controls Metasys building automation system is the primary source of data used for the model calibration, and ongoing setpoint optimization and fault detection capabilities of the tool. Additional sources of data include a weather feed for temperature and wet bulb forecasts. Panel-level electricity consumption data that is not integrated into the Metasys system was used to validate PlantInsight's calculations of plant and chiller energy use that were based on 48 total Metasys points. A blended average cost of electricity ($0.07/kWh) provided by the site utilities manager was used for all calculations to convert energy to dollars.

The data that were used for the development and operation of PlantInsight are summarized in Table 3.

*Table 3. Summary of data and monitoring points used for technology development and operation*

| Data Point | Sampling Frequency | Quantity | Data Source | Use of Data |
|---|---|---|---|---|
| Chiller compressor status | *COV | 10 | Metasys | Model calibration<br>Fault detection and diagnosis |
| Chiller chilled water leaving temperature | 5 min | 6 | Metasys | Model calibration<br>Fault detection and diagnosis |
| Chiller chilled water entering temperature | 5 min | 6 | Metasys | Model calibration<br>Fault detection and diagnosis |
| Chiller chilled water leaving temperature setpoint | COV | 6 | Metasys | Model calibration |
| Chiller FLA motor current | 5 min | 10 | Metasys | Energy calculation<br>Model calibration<br>Fault detection and diagnosis |
| Chiller chilled water pressure difference | 5 min | 6 | Metasys | Calculate chilled water flowrate for model calibration<br>Fault detection and diagnosis |
| Chiller condenser water pressure difference | 5 min | 6 | Metasys | Calculate chilled water flowrate for model calibration<br>Fault detection and diagnosis |
| Cooling tower module status | COV | 14 | Metasys | Model calibration<br>Fault detection and diagnosis |
| Cooling tower condenser water leaving temperature | 5 min | 14 | Metasys | Model calibration<br>Data quality check |
| Cooling tower condenser water entering temperature | 5 min | 14 | Metasys | Model calibration<br>Data quality check |
| Cooling tower condenser water leaving temperature setpoint | 5 min | 2 | Metasys | Model calibration<br>CDW setpoint optimization |
| Cooling tower module fan speed | 5 min | 14 | Metasys | Model calibration |
| Cooling tower module electric power | 5 min | 14 | Metasys | Energy calculation<br>Model calibration<br>Fault detection and diagnosis |
| Outside air dry bulb temperature | 5 min | 1 | Metasys | Model calibration |

| | | | | |
|---|---|---|---|---|
| Outside air relative humidity | 5 min | 1 | Metasys | Model calibration |
| Primary loop chilled water leaving temperature | 5 min | 1 | Metasys | Data quality check |
| Primary loop chilled water entering temperature | 5 min | 1 | Metasys | Data quality check |
| Secondary loop chilled water leaving temperature | 5 min | 1 | Metasys | Data quality check |
| Secondary loop chilled water entering temperature | 5 min | 1 | Metasys | Data quality check |
| Forecasted outside air dry bulb temperature | Hourly | 1 | Weather underground | Load forecast<br>CDW setpoint optimization |
| Forecasted outside air relative humidity | Hourly | 1 | Weather underground | Load forecast<br>CDW setpoint optimization |

*COV stands for change of value

The demonstration did not require addition of meters or sensors other than those already in place at the site. As such, demonstration-specific calibration beyond the site's standard calibration procedures was not conducted, except for the plant temperature sensors (which are critical to the models that underlie the PlantInsight tool). Data were cleaned using standard logic to remove outlier spikes and discard data for periods when values that should have been variable were observed to be constant, or "pinned."

Data quality checks were conducted for the plant temperature sensors by comparing readings with one another and applying engineering logic. Figure 21 shows the location of temperature sensors for the Rickover plant. When only one chiller is running in the plant, chiller-chilled water leaving or entering temperature was compared with primary loop and secondary loop chilled water leaving or entering temperature. The chiller-chilled water leaving or entering temperature reading was deemed reliable if it closely matched the readings of the associated primary loop and secondary loop temperature sensors. When a significant difference was identified, the average difference was calculated and used to correct the measured temperature.

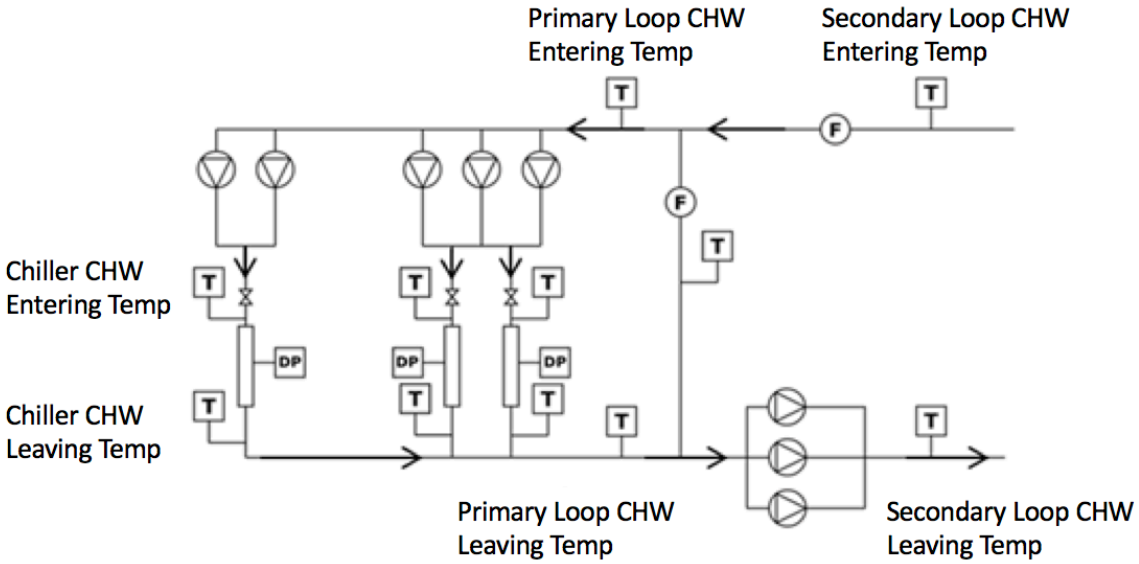


*Figure 21. Location of chilled water temperature sensors at the Rickover plant*

Table 4 summarizes the results of quality assurance checks that showed four of the six chillers had accurate temperature sensors. Below that are sample plots of data used in the analysis.

Figure 22 shows that the Rickover Chiller 1 chilled water leaving temperature closely followed the measurements from primary and secondary loops, indicating that the data are valid and the data from the leaving temperature sensor was correct.

Figure 23 shows that although the Lejeune primary and secondary loop entering temperatures are equivalent, they are approximately, 3°F lower than the Lejeune Chiller 1 chilled water entering temperature. From analysis of the data for all the time periods when only Chiller 1 was running in the plant, it was determined that the entering temperature reading was offset 2.5°F higher than the nominal value. This temperature bias was corrected through a calculation within the PlantInsight tool. Similar analyses for the cooling tower condenser water leaving and entering temperature indicated that the cooling tower temperature sensors were producing accurate readings.

*Table 4. Results of quality assurance checks for chilled water temperature sensors*

| | | |
|---|---|---|
| Rickover plant | Chiller 1 chilled water leaving temperature | Correct |
| | Chiller 1 chilled water entering temperature | |
| | Chiller 2 chilled water leaving temperature | |
| | Chiller 2 chilled water entering temperature | |
| | Chiller 3 chilled water leaving temperature | |
| | Chiller 3 chilled water entering temperature | |
| Lejeune plant | Chiller 1 chilled water leaving temperature | 1.4°F higher than actual value |
| | Chiller 1 chilled water entering temperature | 2.5°F higher than actual value |
| | Chiller 2 chilled water leaving temperature | Correct |
| | Chiller 2 chilled water entering temperature | |
| | Chiller 3 chilled water leaving temperature | 1.1°F lower than actual value |
| | Chiller 3 chilled water entering temperature | 1.1°F lower than actual value |

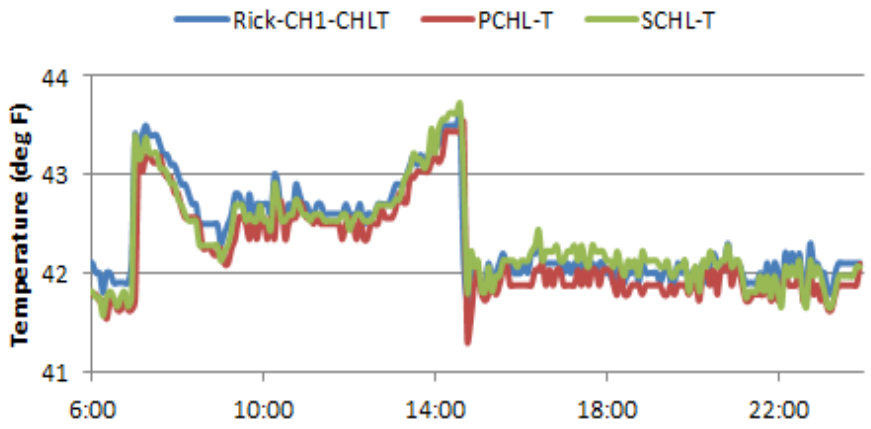


*Figure 22. Quality assurance check for the Rickover Chiller 1 chilled water leaving temperature sensor: The data were plotted from September 13, 2015, when only Chiller 1 was running and the decoupler flow direction was from leaving to entering chilled water*

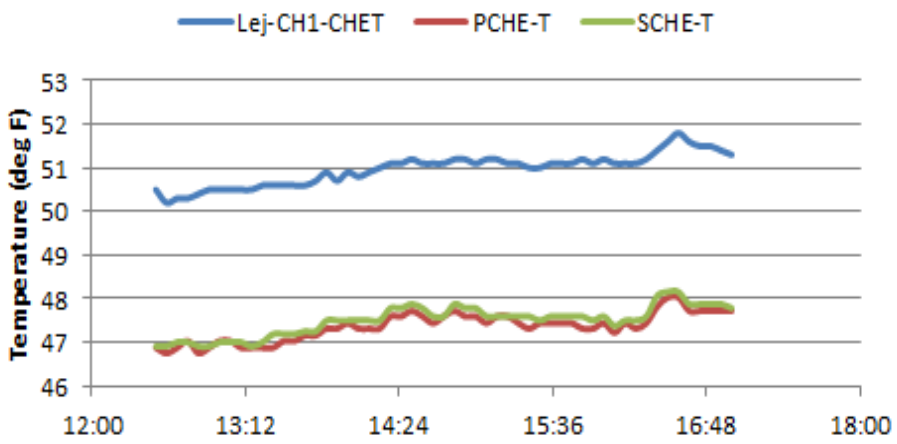


*Figure 23. Quality assurance check for the Lejeune Chiller 1 chilled water entering temperature sensor: The data were plotted from July 13, 2015, when only Chiller 1 was running and the decoupler flow direction was from entering to leaving chilled water*

## 5.6 SAMPLING RESULTS

The figures in this section contain data plots for a sampling of some of the most critical points used in operational testing of the demonstration technology. In

Figure 24, operational data for Rickover Chiller 3 is shown over a five-day period in spring, including the chiller's entering and leaving water temperature, flow, and percent of maximum current.

Figure 25 includes trends for Rickover Cooling Tower 4 over the same time period, and shows water temperature and fan speed and power in each of the tower's two cells.

Figure 26 shows the dry bulb temperature and relative humidity during this period. Figure 27 shows the implementation of the optimal condenser water temperature setpoint, which was ten degrees F lower than the typical static setpoint otherwise used at the plant.

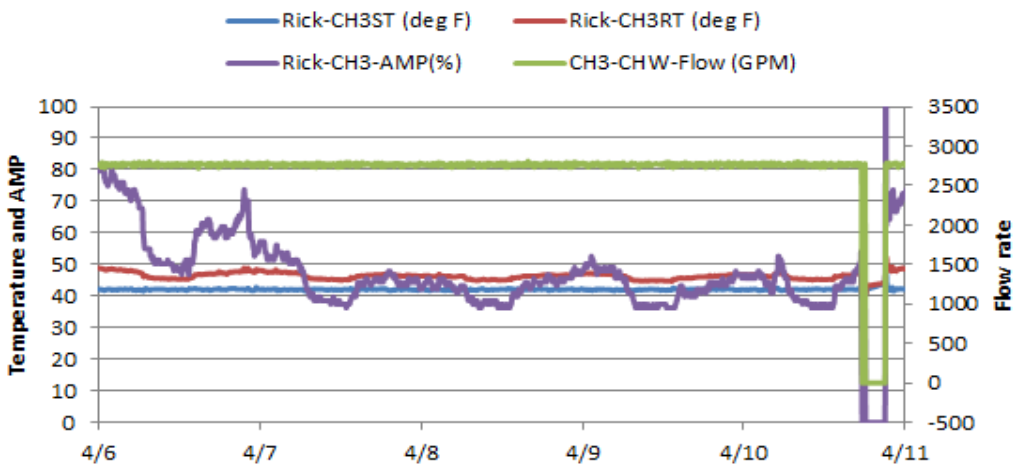


*Figure 24. Operational data for Rickover Chiller 3: April 6–10, 2017*

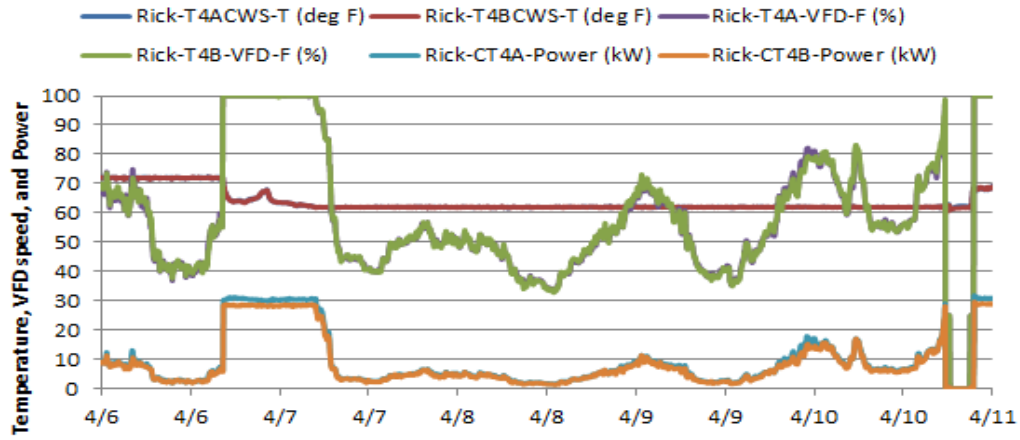


*Figure 25. Operational data for Rickover Tower 4: April 6–10, 2017*

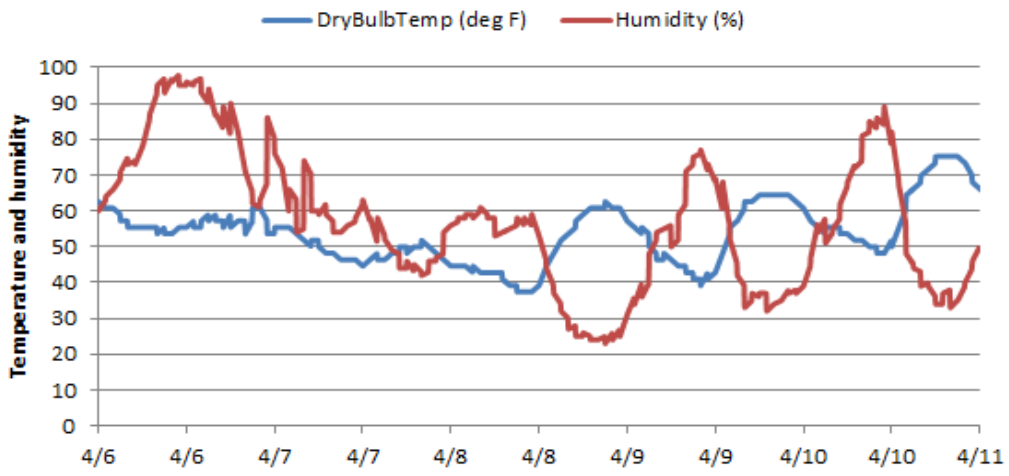


*Figure 26. Relative humidity and dry bulb temperature data for April 6–10, 2017*

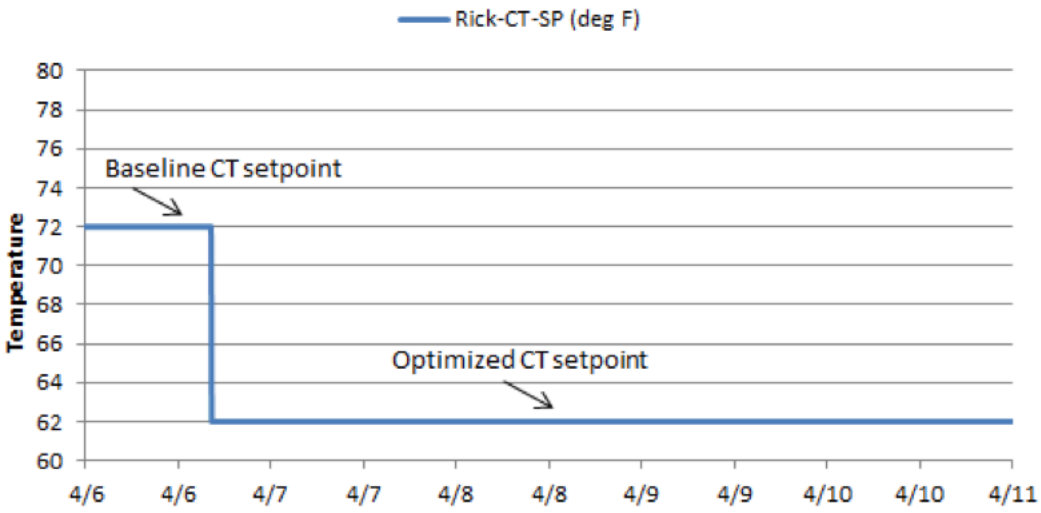


*Figure 27. Rickover cooling tower leaving temperature setpoint changing due to the implementation of an optimized setpoint from April 6–10, 2017*

# 6.0 PERFORMANCE ASSESSMENT

## 6.1 REDUCE CENTRAL PLANT ELECTRICITY USE

### 6.1.1 Procedure

The goal of this performance objective was to reduce the total electricity consumed over the course of one year at the central plant (kWh/year) by 10% with respect to baseline operations. This performance objective was to be met by the implementation of optimized setpoints determined by the tool according to the algorithms described in Section 2.2.2.1. To determine if this performance objective was met, a simulation of tool implementation was used. Specifically, for each plant, measured cooling load data and observed weather conditions were used by the optimization algorithm to determine the optimal condenser water setpoint for a given day. Once this setpoint was determined, the operation of each plant for the given day was simulated using the developed models twice—once with the optimized setpoint and once with the conventional setpoint. The conventional setpoint represents the baseline operation, while the optimized setpoint represents operation with the tool in use. This procedure was repeated every day for one year. Finally, the savings were calculated as the difference between the total annual energy consumption simulated with baseline operation and with optimized operation. Due to periodic issues with data collection of measured cooling load for each plant over the life of the project, the analysis period for this performance objective was confined to September 7, 2014, to September 7, 2015. As this testing procedure assumes perfect knowledge of daily load profiles and weather conditions, the results can be considered an upper bound on the savings potential from implementation of PlantInsight's condenser water setpoint optimization. Additionally, the results were used to provide insights into causes for successful or unsuccessful performance

In addition to assessment of yearly energy savings with a simulation, real energy savings were analyzed using measured data from the site during the period during which plant operators implemented setpoints suggested by the PlantInsight tool. This period was March 29 and April 7–10, 2017.

### 6.1.2 Annual Simulation Results

The results of the analysis indicate daily energy savings of greater than 10% can be obtained for approximately six months of the year, mainly during the winter season. However, on an annual basis, across all 12 months of the year, obtainable annual energy savings were 1.38% (434,785 kWh, $30,435). A number of valuable insights as to when and under what conditions savings are achieved emerged from the analysis.

Figure 28 (left) shows the absolute savings for the two plants as a total, for each day over the course of the year, while

Figure 28 (right) shows the relative savings. The relative savings represent the savings as a percentage of the baseline operation for each day.

Figure 28 in general shows that the majority of savings occur in the winter time, when only the Rickover plant is in operation and the cooling load and total energy consumption is low. Some additional savings occur in the summer, when the Lejeune plant is in operation. In total, the Rickover plant achieves greater than 10% energy savings 48% of the days of the year, while Lejeune does not achieve greater than 10% energy savings for any portion of the year. While relative savings during the winter can be as high as 30%, the total power consumption is low, and therefore the contribution to annual savings is too low to meet the annual 10% target.

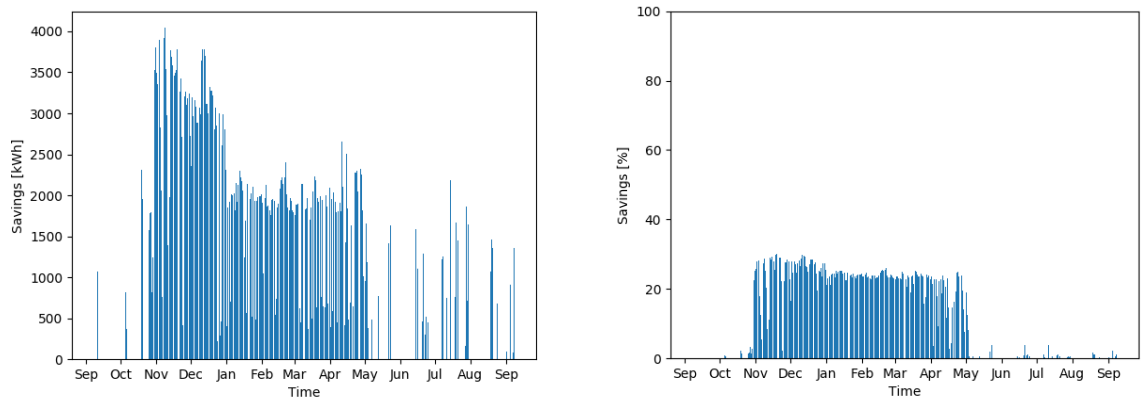


*Figure 28. Simulated daily energy savings from September 2014 through September 2015 (left: absolute value; right: relative)*

Further analysis shows that savings potential is driven by outside wet bulb temperature in addition to the trade-off between cooling power and chiller power consumption. For Rickover, during the winter when savings potential is high, the optimal condenser water setpoint temperature is low, indicating that working the fans harder to achieve a lower condenser water temperature is worth the increase in chiller efficiency and lower chiller energy consumption. Meanwhile, in the summer, high wet bulb temperatures limit the ability for the cooling towers to lower the condensing temperature and provide any energy savings. For Lejeune, on days that provide a higher savings potential, the optimal condenser water setpoint temperature is high, indicating that working the fans less on those days is worth a slight loss in chiller efficiency. However, the savings in tower fan energy is relatively small compared to chiller power, and so the savings on the system is small. Tables 5 and 6 show the relative fan and chiller power for Rickover and Lejeune plants for typical days in which savings can be seen by using the optimal setpoint.

*Table 5. Savings breakdown for Rickover*

| Day: 2/18/2015 | | | |
|---|---|---|---|
| **Case** | **Chiller (J)** | **Tower (J)** | **Total (J)** |
| Optimal | 2.13E+10 | 4.56E+08 | 2.17E+10 |
| Baseline | 2.89E+10 | 2.50E+08 | 2.91E+10 |
| Difference | -7.62E+09 | 2.06E+08 | -7.42E+09 |
| | | **Savings %** | 25.44 |

*Table 6. Savings breakdown for Lejeune*

| Day: 8/18/2015 | | | |
|---|---|---|---|
| **Case** | **Chiller (J)** | **Tower (J)** | **Total (J)** |
| Optimal | 3.36E+11 | 3.15E+09 | 3.39148E+11 |
| Baseline | 3.32E+11 | 1.28E+10 | 3.4475E+11 |
| Optimal Difference | 4.00E+09 | -9.60E+09 | -5.60E+09 |
| | | **Savings %** | 1.62 |

### 6.1.3 Performance Assessment with Field Data

In addition to simulation, energy savings were evaluated using field testing data from the implementation of optimal setpoints on March 29 and April 7–10, 2017. During this time period, the site operational staff adjusted the cooling tower setpoint to the optimized setpoint suggested by the PlantInsight tool. After this time period, further implementation of the recommended optimal setpoints was precluded by chiller downtime and repairs, transitions to summer and term-time conditions, and time-sensitive resource-intensive projects that limited staff ability to conduct experimental operational changes. Toward the end of September 2017, daily use of optimized setpoints was reinstituted; however, disconnection of the head-end kiosk from which data are exported to the PlantInsight tool prevented acquisition of the operational data to extend the savings analysis based on measured field data.

In the initial performance testing on March 29, 2017, the setpoint for the cooling towers was changed to 65°F. This caused instability in the tower fans and inability to maintain the tower leaving temperature at setpoint. Troubleshooting revealed a default setting in the control sequence that set the tower fan speed to zero when the tower leaving temperature was less than 70°F. This parameter was changed to 60°F, and the second performance test was executed from April 7–10, 2017. Figure 27 in Section 5.6 showed the change of cooling tower setpoint and associated change in cooling tower leaving temperature, and that tower leaving temperature successfully met the 62°F setpoint.

From April 7–10, 2017, only Rickover Chiller 3 and Tower 4 were operating. The energy savings was estimated as defined in Equation 8.

$$\text{kWh Savings} = \text{kWh}_{_\text{Baseline}} - \text{kWh}_{_\text{Post_Implementation}} \quad (8)$$

In this equation, $kWh_{_Baseline}$ represents the measured energy consumption at a given cooling load with the baseline 72°F static setpoint. $kWh_{_Post_Imlementation}$ represents the measured energy consumption at a given cooling load with the optimized tower setpoint from PlantInsight.

A linear regression baseline model was created with the data from February and March 2017, when only Chiller 3 and Tower 4 were in operation. The total electricity use of the chiller and tower was regressed against the chiller's cooling load. The resulting baseline model shows good fitness, with an $R^2$ of 0.8, normalized mean bias error of 0.04%, and CVRMSE of 6%. The fit between model and baseline data is shown in
Figure 29. The equation for the baseline model is:

$$kWh_{_Baseline} = (0.53*cooling_load\ (ton) + 102.87) * hours \qquad (9)$$

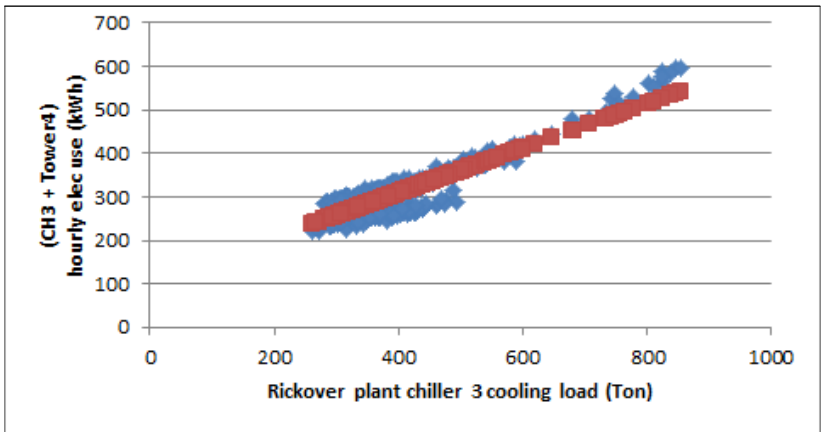


*Figure 29. Baseline energy data: metered (blue) vs. modeled (red)*

Figure 30 shows the savings results from projecting the baseline model to estimate the energy use that would have occurred during the test period had the optimized setpoints not been implemented. 17% savings were achieved over this four-day period, for a total of 5,436 kWh.

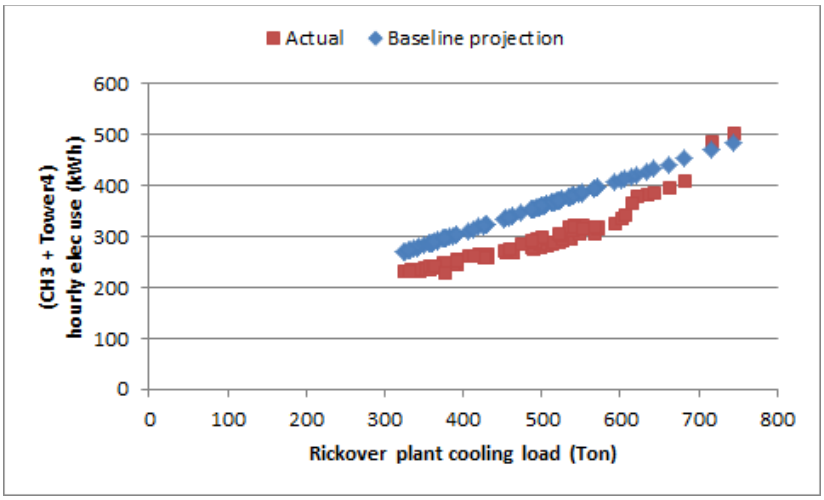


*Figure 30. Actual vs. baseline-predicted energy use (test period: April 7–10, 2017) during which 17% energy savings were quantified*

## 6.2 REDUCE CENTRAL COOLING PLANT GREENHOUSE GAS EMISSIONS

The goal of this performance objective was to reduce the equivalent $CO_2$ emissions associated with the electricity used to run the central cooling plant over the course of one year (metric tons) by 10% with respect to baseline operations. Similar to the energy savings performance objective discussed in Section 6.1, this goal was to be met by the implementation of optimized setpoints determined by the tool according to the algorithms described in Section 2.2.2.1. Therefore, to analyze this performance objective, the procedure and findings in Section 6.1 were used, with a conversion factor applied to estimate GHG emissions attributable to plant electricity consumption. This conversion factor was obtained from ENERGY STAR's Portfolio Manager Greenhouse Gas Emissions Technical Reference Guide (ENERGY STAR 2017). The factor was obtained by assuming indirect emissions, since electricity is produced by the utility off-site, and using EPA's Emissions & Generation Resource Integrated Database (eGRID) for August 2017 in the RFCE (mid-Atlantic) region, which includes Maryland. The conversion factor was 110.93 $kgCO_2$/MBtu (378.5 $kgCO_2$/kWh).

With a single conversion factor applied, the results of the analysis were the same as performance objective 6.1 in terms of percent savings. That is, greater than 10% daily savings were achieved for approximately six months of the year for the two-plant combined total. However, on an annual basis, achievable annual savings of 1.38% were achieved. This result was due to the same reasons as described in the energy performance objective reported in Section 6.1. This savings potential translates to 181,403 tons of cooling for the combined plant total.

## 6.3 SYSTEM ECONOMICS

The life-cycle cost analysis that was conducted to evaluate system economics is described in detail in Section 7.0. The analysis confirms that the demonstration technology can meet simple and discounted paybacks of 1.4 years, satisfying the five-year performance objective.

## 6.4 CENTRAL PLANT MODEL CALIBRATION

The performance objective associated with plant model calibration stipulated that the difference between model-predicted and measured parameters be less than 10%, for 90% of data points. This objective was satisfied for three of six chillers, and for each of the ten cooling towers for which there was sufficient data. Table 7 shows these results. In the table, Rick-CH1, Lej-CH1, Lej-CH2, and Lej-CH3 represent the four 2,500-ton dual compressor chillers, and Rick-CH2 and Rick-CH3 represent the two 1,250-ton single-compressor chillers. Lej-T1, Lej-T2, Lej-T3, Rick-T1, Rick-T2, Rick-T3, and Rick-T4 are the seven cooling towers, each of which has two cells, denoted A and B.

For the three chillers that could not be calibrated to the performance objective, it is suspected that the causes were either limited volume of data representing full-capacity operation, erroneous data, or faulted operations underlying the data. In the case of the cooling towers, four cells could

not be calibrated because the necessary calibration parameters were not available or were erroneous from the measured data history at the site. These are designated "N/A" in Table 7. Since the model structure for each of the cooling towers were equivalent, the calibration parameters for towers that were well-calibrated were applied to those for which calibration data were not available. The calibration parameters for chillers that were less well-calibrated were used in the chiller models, even though they were less than ideal with respect to the performance objective.

*Table 7. Percentage of calibration data points within the 10% error band*

| | **Rick-CH1** | **Rick-CH2** | **Rick-CH3** | **Lej-CH1** | **Lej-CH2** | **Lej- CH3** | | |
|---|---|---|---|---|---|---|---|---|
| Chiller COP | 99% | 99% | 81% | 75% | 99% | 79% | | |
| | **Lej-T1A** | **Lej-T1B** | **Lej-T2A** | **Lej-T2B** | **Lej-T3A** | **Lej- T3B** | | |
| Cooling tower fan power (W) | 92% | N/A | 95% | 95% | 96% | N/A | | |
| Cooling tower leaving temp (°C) | 96% | N/A | 95% | 97% | 95% | N/A | | |
| | **Rick-T1A** | **Rick-T1B** | **Rick-T2A** | **Rick-T2B** | **Rick-T3A** | **Rick-T3B** | **Rick-T4A** | **Rick-T4B** |
| Cooling tower fan power (W) | 95% | 97% | N/A | N/A | 95% | 93% | 92% | 92% |
| Cooling tower leaving temp (°C) | 98% | 98% | N/A | N/A | 98% | 98% | 99% | 98% |

Figures 31 and 32 contain selected examples of the calibration results for the chiller and cooling tower models:

- Figure 31 shows model-simulated versus measured COP for a case in which the performance objective was met, and for a case in which it was not met.
- Figure 32 shows model-simulated versus measured cooling tower fan power and cooling tower leaving temperature, for one of the ten towers for which the performance objective was met.

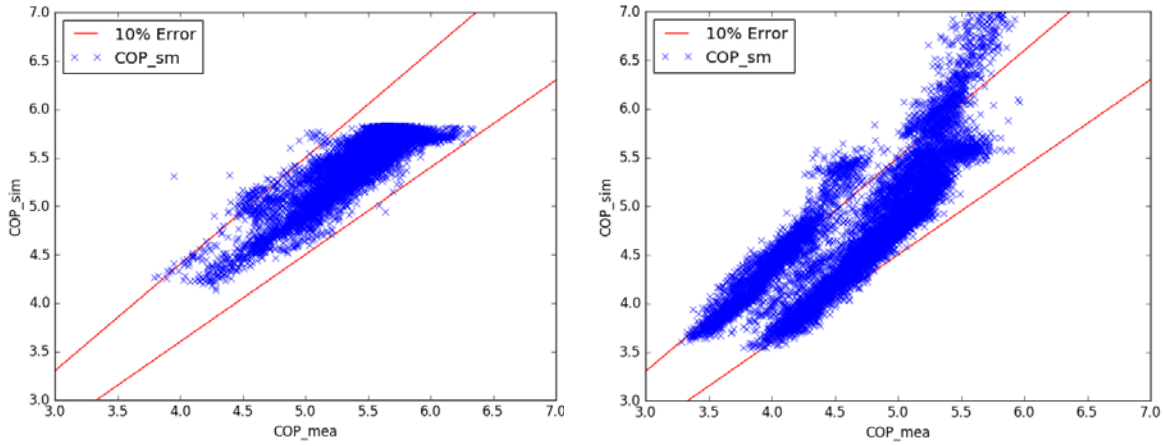


*Figure 31. Comparison of simulated and measured chiller coefficient of performance for chiller Lej-CH2, for which the model calibration performance objective was met (left,) and for chiller Lej-CH3, for which it was not met (right)*

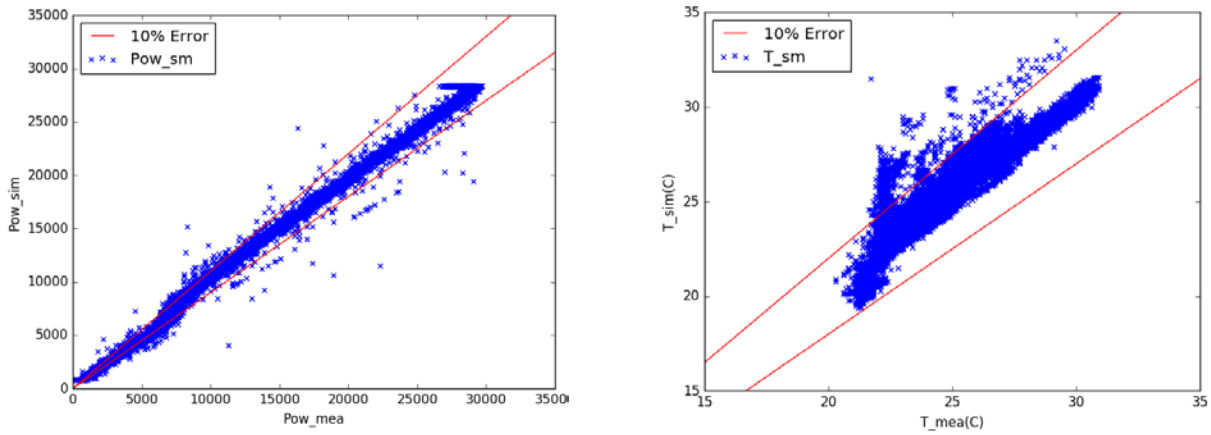


*Figure 32. Comparison of simulated (left) and measured (right) cooling tower fan power and cooling tower leaving temperature for tower Rick-T3A. In both cases the model calibration performance objective was met.*

Given that the majority of the models used in PlantInsight were able to be closely calibrated to the measured data from the site, the demonstration team was comfortable to incorporate the models into the PlantInsight tool. The assessment of the energy-savings performance objective confirmed that for key seasonal conditions (low wet bulb temperature), the model-derived optimized setpoints were indeed more efficient than the heuristic static setpoint typically used to operate the plant.

## 6.5 USER SATISFACTION

The criterion to provide equal or improved satisfaction relative to existing operational tools was satisfied.

The two primary users of PlantInsight— the USNA central chilled water plant manager and the lead central plant operator—were interviewed and surveyed following release of the v1 version of the tool to USNA. The campus utilities manager was not able to attend the interview.

Overall, users reported that satisfaction with the capabilities of PlantInsight was equal to or better than that with the preexisting JCI Metasys system that is used for plant operations. Although PlantInsight is intended to complement (not replace) the Metasys system, from a user satisfaction standpoint, it provides a meaningful benchmark.

Satisfaction with PlantInsight was equal to that with Metasys for the following capabilities:

- visualization and plotting of plant load data
- chiller and fan cycling fault detection

Satisfaction with PlantInsight was greater than with Metasys for the following capabilities:

- visualization and plotting of efficiency curves (kw/ton vs. ton)
- quantification of plant energy consumption
- provision of chiller runtime and energy use summary metrics
- weather and plant load forecasting
- optimization of central plant setpoints

Satisfaction with PlantInsight relative to utility cost quantification and impacts could not be assessed due to the absence of the utilities manager. These included:

- quantification of central plant utility costs
- quantification of fault cost impacts
- quantification of operating costs for different plant setpoints

The capabilities of PlantInsight that were deemed most valuable are summarized in Table 8; users were asked to select three to five capabilities from a list of eleven options. On the whole, users stated that the technology improved their ability to operate the plant more efficiently by identifying the load and energy impacts associated with changes in setpoints and equipment operations.

*Table 8. User feedback on the three to five most valuable capabilities of PlantInsight (demonstration technology)*

| PlantInsight Capabilities | Highest Value to Plant Manager | Highest Value to Plant Operator |
|---|---|---|
| Visualization and plotting of plant load data | X | X |
| Visualization and plotting of efficiency curves (kw per ton vs. tons) | X | X |
| Quantification of plant energy consumption | X | |
| Quantification of plant utility/operational costs | X | |
| Weather forecasting | X | |
| Chiller runtime and energy use summary statistics | | X |
| Optimization of central plant setpoints | | X |
| Fan cycling fault detection | | |
| Chiller cycling fault detection | | |
| Quantification of cost of faults | | |
| Central plant load forecasting | | |

On a scale of 1–5, with 3 being neutral and 5 being highly satisfied, the plant manager and lead operator rated the PlantInsight user interface, FDD and optimization outputs, and tool overall at a level 4. This finding is summarized in Table 9.

*Table 9. User feedback on the PlantInsight user interface, FDD, and optimization outputs, and on the tool overall*

| Characteristic | Not Satisfied | | Neutral | | Highly Satisfied |
|---|---|---|---|---|---|
| | 1 | 2 | 3 | 4 | 5 |
| User interface | | | | X | |
| FDD and optimization outputs | | | | X | |
| Tool overall | | | | X | |

Users noted that an additional metric of interest is $/ton, which could be used to complement the current display of kw/ton vs. ton operational efficiency. Cost savings associated with discrete setpoint changes were also noted as a useful complement to the currently displayed energy savings. In addition, users highlighted that while daily setpoint changes could be accommodated, and recommendations that could apply to a three- to five-day time horizon would be ideal.

The ability to identify equipment degradation and/or impending failure was identified as additional functionality that could be useful. These prognostic capabilities are beyond the scope of fault detection and diagnostics, and optimized control that are the focus of this technology development and demonstration effort. However, prognostics and condition-based maintenance are indeed ripe areas for future work.

# 7.0 COST ASSESSMENT

## 7.1 COST MODEL

A cost model for the PlantInsight tools is presented in Table 10. This cost model reflects estimated cost that would be required to implement the technology anew at a real site. All estimates are based on observations of team and partner experiences throughout the course of the demonstration.

*Table 10. Summary of demonstration technology cost elements and estimates*

| Cost Element | Description of Cost Element | Estimated Costs |
|---|---|---|
| **Hardware Capital Costs** | Cost of metering required to calibrate models and execute optimization and FDD algorithms | $18,000 |
| **Installation Costs** | Labor to install and configure PlantInsight<br>Labor required to implement data export from BAS to PlantInsight<br>Labor to install flow meters<br>Labor to create and calibrate models | $897<br>$897<br>$6,435<br>$8,372 |
| **Consumables** | N/A | N/A |
| **Facility Operational Costs** | Annual plant energy used with PlantInsight optimized setpoints<br>Labor time to use the tool | $2,170,535 per year<br>$4,126 per year |
| **Maintenance** | Labor to conduct software IT maintenance<br>Labor to calibrate flow meters<br>Labor to update and recalibrate models | $1,077 per year<br>$423 every five years<br>$8,416 every five years |
| **Hardware Lifetime** | Natural degradation flow meters over time | 10 years |
| **Operator Training** | Staff time to learn how to use the software and become familiar with the interface | $423 every five years |

Hardware capital costs are costs associated with devices to measure data inputs necessary to run the PlantInsight tool. These costs were not incurred in the USNA demonstration of PlantInsight, as all data required for the model calibration and execution of the optimization and fault detection algorithms was already being monitored in the plant control system. These data points are summarized in Section 5.5, Table 3. Plants that have a less complete monitoring infrastructure may require the installation of additional sensing or metering hardware. Of the set of required data points, chiller flow meters are most likely to be absent. In these more typical cases, we estimate that an average installation may require approximately six flow meters at a unit cost of approximately $3,000, for a total cost of $18,000. Chiller, pump, and fan power measurements are likely obtainable from existing meters or calculations based on variable frequency drive (VFD) or constant speed status. Hence, no costs were included for monitoring these data points in this analysis.

Installation costs include the labor and material required to install the PlantInsight tool on a server and implement data export from the plant BAS to the PlantInsight database. Installation of the PlantInsight tool software requires obtaining the repository containing the code, ensuring Docker software is functioning on the server, configuring the communication settings of the application and database, starting the database and application Docker containers, and testing functionality through the browser-based GUI. This task may require 2.5 person days. For the USNA demonstration, data export from the plant BAS to the PlantInsight database required opening a secure port on the BAS workstation and installing a relatively simple script to push the data for selected points from the onsite SQL data server to PlantInsight. Two-and-a-half person-days may be required for this task, including time to identify the points in the BAS, modify the script developed in the demonstration, and install and execute it. This time estimate does not include any unique site-specific IT challenges that may be encountered, but cannot be reliably forecasted or categorized for a generalized estimate. Assuming a national average annual server administrator salary of $65,000 (Glass Door), with a factor of 1.43 (obtained from Bureau of Labor Statistics-BLS Employee costs for June 2017) to account for benefits and 2,087 work hours per year, the installation of PlantInsight tool and the implementation of data export would amount to approximately $897.

The costs associated with installing all the flow meters is estimated to be $6,435. This estimate is based on the installation costs for electrical sub-meters ($500/unit) with a 50% adder to account for the additional complexity of fluid flow meters. Initial creation and calibration of models could require four weeks of mechanical engineering time, assuming a practiced modeler with access to site drawings and associated information, as well as necessary data cleaning, testing, and integration. Given a national average salary of $76,000 (Glass Door), including the BLS benefits factor, the associated cost would be approximately $8,372.

Facility operational costs include the annual cost of electricity used to operate the cooling plant with the optimized setpoint from the demonstration technology. Based on the annual energy consumption simulation conducted for the savings analysis in Section 6.1.2, this cost would be $2,170,535 per year. (The electricity consumption costs for the existing system, without the operation of the PlantInsight tool, are calculated to be $2,200,970.) Operational costs also include operator time to use the tool, estimated at 1.5 hr per week, or approximately $4,126 per

year, assuming the national average facility manager annual salary, including the costs of benefits.

Fully burdened maintenance costs include the efforts of a server administrator to ensure continuity in data feeds, and are estimated at three days per year, or approximately $1,077 per year. This assumes that an existing server is leveraged to host the software and therefore does not include general server maintenance costs. Calibration of flow meters is estimated at one day of facility manager time every five years, based on fully burdened rate, amounting to $423 per instance of calibration service.

Operator training entails approximately one person-day of time, total, across two to four users of the technology. This is the time required to learn how to use the software and become familiar with the interface. Assuming the national average facility manager fully burdened salary, this amounts to approximately $423, approximately every five years, to factor in staff turnover.

## 7.2 COST DRIVERS

The most significant cost drivers for the demonstration technology are hardware capital and installation costs, engineering costs to create and calibrate models, and operators' time to use the tool. USNA has a modern well-instrumented central cooling plant that did not require the addition of supplementary hardware to monitor plant operational parameters. This may not be the case in other facilities. The cost model assumed that installation of chiller flow meters would be required; however, depending on the specific site, additional instrumentation could be required, introducing higher hardware and installation costs. Over time, as equipment and operations evolve, or for new installations, the models that underlie the tool's algorithms may require modification and calibration.

## 7.3 COST ANALYSIS AND COMPARISON

To model and run the cost analysis, we assume implementation of the technology in a large facility approximately equivalent to that of the USNA, which is served by multiple chillers, which may be split across several individual cooling plants. Hardware costs assume that, on average, six chiller flow meters may need to be added to provide the required data for the tool, and that those meters would need periodic calibration. Similarly, models may require periodic updating by an engineer. The analysis also assumes regular use of the PlantInsight tool by operational staff, as well as annual IT maintenance. These and other assumptions for the cost model are discussed in further detail in Section 7.1 and summarized in Table 10.

The NIST BLCC tool was used to conduct a comparative analysis between the demonstrated technology and the current approach. Under the current approach, the cooling tower operates with a single static condenser water temperature setpoint, and operators use the Metasys BAS system for system monitoring. Since the energy savings potential is driven by climate (wet bulb temperatures), cost-effectiveness could increase in drier climates.

The analysis was conducted using the BLCC tool's *MILCON Analysis for an Energy Project* option. The mapping of the costs in Table 10 to the inputs of the BLCC tool is shown in Table 11.

*Table 11. Mapping of the BLCC tool inputs to elements of the demonstration technology cost model*

| **BLCC Input** | **Cost Model Elements** | **Itemized Costs** | Total Costs |
|---|---|---|---|
| Initial Investment Costs (First Cost) | Hardware capital costs | $18,000 | $34,601 |
| | Installation costs | $6,435 | |
| | Calibration and modeling costs | $10,166 | |
| Annual Energy Cost | Current annual energy costs | $2,200,970 | |
| | Annual energy costs - with PlantInsight | $2,170,535 | |
| Annual Recurring O&M and Labor Costs | Facility operational costs - labor time to use the tool | $4,126/year | $5,203 |
| | Labor to conduct software IT maintenance | $1,077/year | |
| Non-Annual Recurring O&M and Labor Costs (every 5 years) | Calibration costs | $8,416 | $9,262 |
| | Staff time to learn how to use the software and become familiar with the interface | $423 | |
| | Labor to calibrate flow meters | $423 | |

The following are the other assumptions used in the model:

- Project Life: 10 years (assuming the software has a shelf life of only 10 years and needs major overhaul after that time period)
- Salvage Value: $0
- Escalation Rates:
  - Assumed BLCC recommended rates for the energy rates
  - Assumed an inflation rate of 2% for O&M, repair, and other labor costs
- Assumed a discount rate of 3%, with a mid-year discounting
- The project will start performing from April 1, 2018. The period between April 1, 2017, and March 3, 2018, is considered to be the baseline period.

The following are the results of the cost-comparison analysis between the two options ("do nothing" and maintain current operations versus operate with PlantInsight):

- Savings-to-Investment Ratio (SIR): 7.21
- Adjusted Internal Rate of Return: 23.26%
- Simple Payback: 1.37 year
- Discounted Payback: 1.42 year

The full comparative analysis report is included in Appendix D.

# 8.0 IMPLEMENTATION ISSUES

Future implementation of the technology concerns three pertinent areas: IT security, maintenance and evolution, and scale-up and transition. There are no regulations that apply to use of the technology. The only equipment that may be required for implementation may comprise additional off-the-shelf sensors or meters, as discussed in Section 7.

1. IT Security

The PlantInsight technology requires unidirectional transfer of cooling plant operational data *from* the site *to* the application's database. The application is hosted on a web server and is accessible via a web browser. In the USNA demonstration, port 443 was used to establish secure communications from the Metasys BAS Kiosk to the PlantInsight application; for ongoing use at USNA, PlantInsight could be ported to a USNA server.

To satisfy DoD IT security requirements, future installations can consider several options that surfaced over the duration of the demonstration. PlantInsight can be integrated within existing accredited applications, as was the original intent when the demonstration was first initiated at the Washington Navy Yard (WNY). Specifically, accreditation refers to compliance with the Risk Management Framework (RMF) for DoD information technology, which has replaced DIACAP (DoD information assurance certification and accreditation process). This would require some re-architecting the code based on the specific technology to be integrated with, however in anticipation of this mode of delivery, PlantInsight has been designed with modular separation of the interfaces between the models, algorithms, and user-facing information provided through the GUI. Alternatively, PlantInsight could be put through the accreditation process itself. Another option that was explored was to push plant operational data from USNA to a server farm on a secure Navy network, with PlantInsight accessing the data through a virtual private network (VPN) application. This architecture is illustrated in Figure 33.

The third option that was explored was to leverage the "Enabler" data transport system that was under development by NDW at the time that the demonstration was being transferred from WNY to UNSA. Illustrated in Figure 34, the Enabler architecture would have been the most general solution for replicating the implementation of PlantInsight in standard DoD installations. However, this was deemed unnecessary given the requirements at UNSA. The Enabler is no longer available for use, and if NDW decides to pursue implementation of the technology at additional installations, viable cyber security solutions will need to be identified.

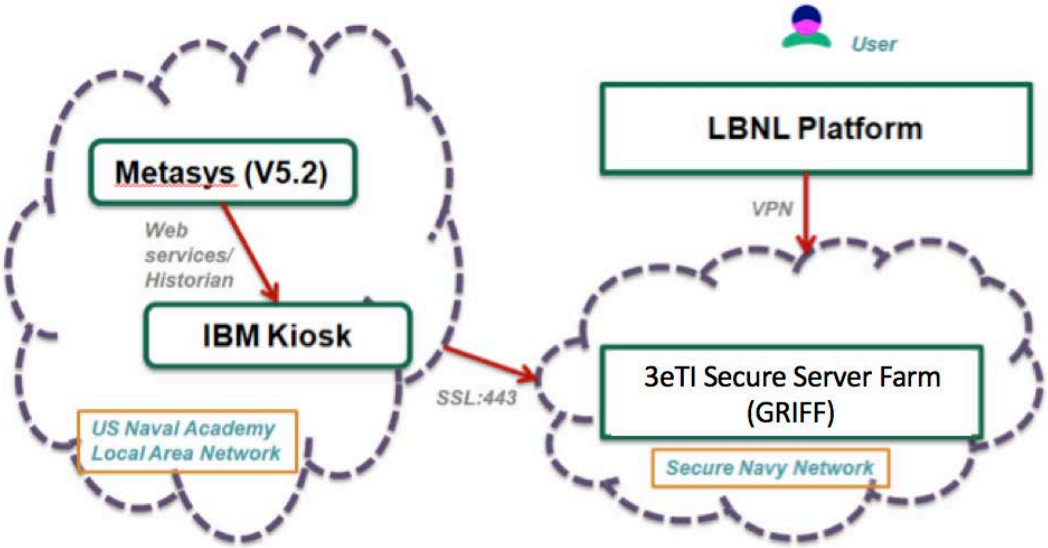


*Figure 33. Use of a server farm in a secure Navy network to host data for PlantInsight*

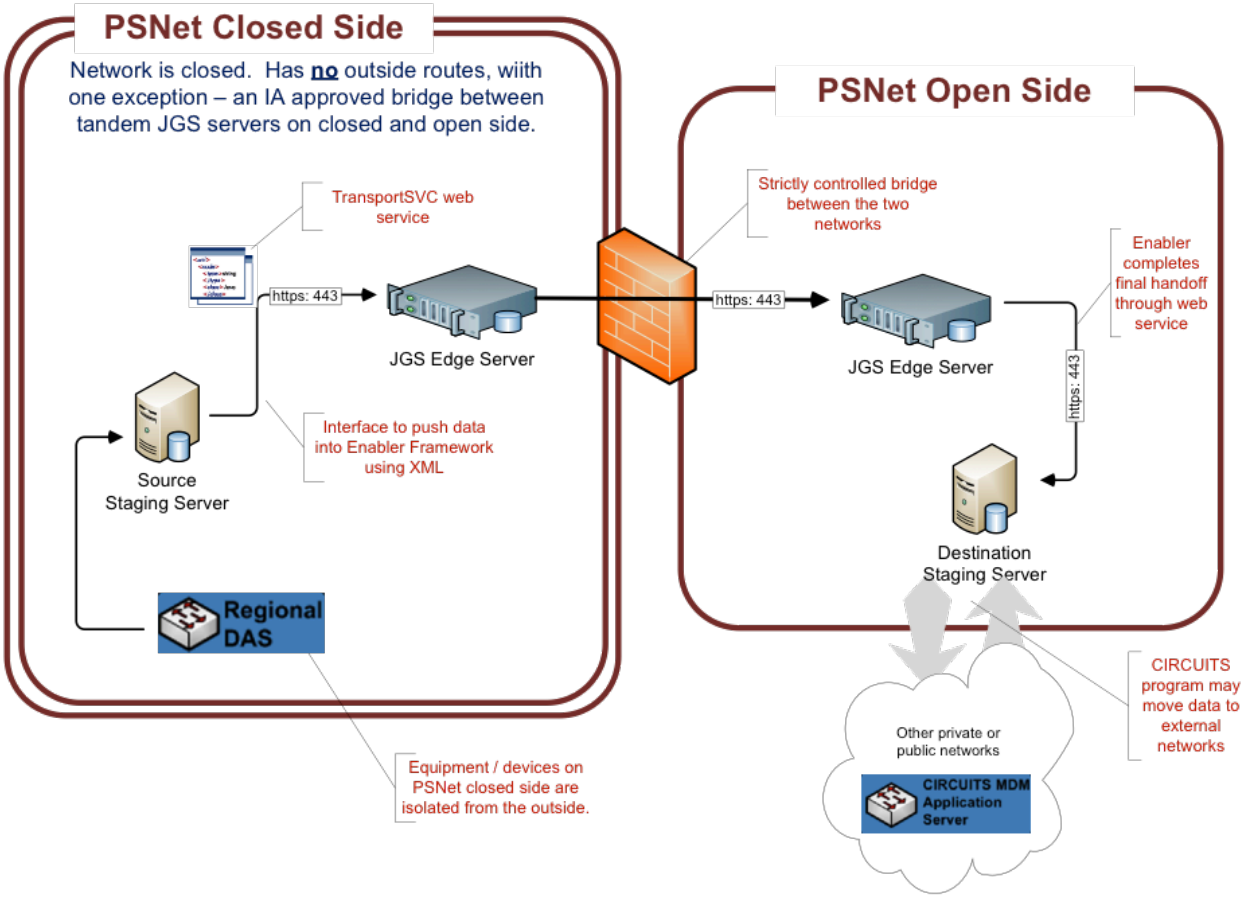


*Figure 34. Illustration of the Enabler data transport system that was previously under development by NDW*

2. Technology Maintenance and Evolution

As the demonstration comes to a conclusion, LBNL will work with UNSA IT to transfer the tool from LBNL's server to a server and location that will comply with IT security requirements. This is a key step in ensuring that the technology can continue to provide efficiency improvements to the chiller plant operations.

Similarly, as the campus grows and cooling load is added, as plant equipment is updated, and as operations evolve over time, it will be necessary to update and recalibrate the models used in PlantInsight. Although it is not yet used universally throughout the industry, companies such as HOK, JCI, and UTC have staff that are familiar with the modeling language (Modelica) upon which the tool is built. They could potentially be contracted to support future model modification and calibration.

3. Technology Scale-up and Transition

To make the PlantInsight Tool available to other DoD installations, it will be released through an open source software license. This will enable stand-alone use according to its current design, or adaptation for use within existing installation energy management facility and information systems as described in the considerations of IT security. Several types of documentation have been developed to support these future transition activities, and to support ongoing use at USNA.

For developers and implementers, the following documentation is provided: (a) code overview, with key module integration, functionality, and dependencies (Appendix B); (b) higher-level description of tool architecture and installation and configuration requirements (to be released with code); and (c) guidance on model creation and calibration (Appendix E).

For installation users, a user guide (Appendix F) explains the tool's functionality and how it can be used to generate and track energy and utility cost savings.

Further discussion with Naval Facilities Engineering Command (NAVFAC) Utilities, and Energy Management will be pursued to determine how the PlantInsight solution could be utilized in the NDW region given. Independent of the region in which future implementations occur, preliminary installation integration scoping begins with an identification of existing control analytical and diagnostic technologies, vendors and service providers, and preferred implementation architecture. Based on lessons learned during the demonstration these preliminary plans require an understanding of the specific BAS used, the points monitored and extent of historic data that is stored, existing meter analytics or fault diagnostic software tools that may be in use, plant drawings and control sequences, and IT configurations. The most critical step for a new installation is to identify secure and reliable methods of data access and hosting for PlantInsight. Moreover, savings potential can be maximized at installations in drier climates, where lower wet bulb temperatures will be present for a larger portion of the year.

In conclusion, future implementations of the technology will benefit from awareness of the following higher-level lessons that were learned throughout the course of the demonstration. First, operators place strong value on access to tools that provide visibility into how controls impact energy use and cost. This is not as a rule available in today's commercial analytics technologies that span building automation systems, meter analytics tools, or equipment-specific fault detection and diagnostics tools. As such, HVAC optimization technologies represent advances in the state of today's available technology, and this is even more true of optimization tools that incorporate physics-based modeling approaches. The ESTCP technology demonstration program has acted as a leader in the demonstration of these leading-edge solutions, and future implementations will continue to contribute to the state of knowledge of their development and application.

Model-predictive optimization, combined with fault detection and diagnostics, is recognized as a critical aspect of realizing the dynamic low-energy buildings of tomorrow, and today's applications can deliver even more impact from expanding the set of parameters that are included in the optimization, as well as the number of end uses that are considered. Although these technologies represent advanced forward-looking applications, the external infrastructure to support their delivery at scale is mature; cloud hosting and computational scalability are well supported through modern IT solutions. In contrast, the most significant practical implementation barriers are the brittle building data acquisition and communication systems that present chronic challenges to analytics applications that need to interface with controls data. Finally, we note that the creation and calibration of physics-based models that are intended to be used in the operational phase of the building life-cycle is highly dependent upon the specific algorithms with which they will be paired. The open, reference implementations that are delivered with PlantInsight are important contributions to industry's continued success in leveraging these promising approaches for next-generation building energy efficiency.

# 9.0 REFERENCES


Adetola, V., Bailey, T., Bengea, S., Kang, K., Leonardi, F., Li, P., Lovett, T., Mijanovic, S. Sarkar, S., Borrelli, F., Kelman, A., and Vichik, S. 2014. *Energy performance monitoring and optimization system for DoD Campus.* ESTCP Report prepared by United Technologies Research Center and University of California, Berkeley to Department of Defense. Project number: EW-201142.

Alobaid, F., Postler, R., Strohle, J., Epple, B. and Kim, H. G. 2008. "Modeling and investigation start-up procedures of a combined cycle power plant." *Applied Energy* 85: 1173–1189.

Blochwitz, T., Otter, M., Arnold, M., Bausch, C., Clauss, C., Elmqvist, H., and Wolf, S. 2011. "The functional mockup interface for tool independent exchange of simulation models." *Modelica (March) 2011 Conference*. 20–22.

Bonvini, M., Piette, M. A., Wetter, M., Granderson, J., and Sohn, M. 2014a. FDD Bridging the gap between simulation and the real world: An application to FDD. *Proceedings of the 2014 ACEEE Summer Study on Energy Efficiency in Buildings*: (11). 25–35.

Bonvini, M., Sohn, M., Granderson, J., Wetter, M., and Piette, M. A. 2014b. "Robust on-line fault detection and diagnosis for HVAC components based on nonlinear state estimation techniques." *Applied Energy* 124. 156–166.

Casella, F., and Pretolani, F. 2006. Fast Start-up of a Combined-Cycle Power Plant: A Simulation Study with Modelica. Proceedings of the 5th International Modelica Conference.

Department of Defense (DoD), Office of the Assistance Secretary of Defense (Energy, Installations, and Environment). June 2016. Department of Defense Annual Energy Management Report Fiscal Year 2015.

Deuring, A., Gerl, J. and Wilhelm, H. 2011. Multi-Domain Vehicle Dynamics Simulation in Dymola. Proceedings of the 8th International Modelica Conference.

ENERGY STAR. 2017. Portfolio Manager Technical Reference: Greenhouse Gas Emissions. Available online at https://www.energystar.gov/sites/default/files/tools/GHG_Emissions_August_2017_EN_508.pdf

Fernandez, N., et al. 2017. *Impacts on commercial building controls on energy savings and peak load reduction.* Pacific Northwest National Laboratory. PNNL Report Number PNNL-25985.

Fuller, Sieglinde, and Stephen R. Petersen. 1996. *Life-Cycle Costing Manual for the Federal Energy Management Program.* NIST Handbook 135. 1995 Edition. Prepared for the U.S. Department of Energy. http://fire.nist.gov/bfrlpubs/build96/PDF/b96121.pdf

Granderson, J., and Lin, G. 2016. "Building Energy Information Systems: Synthesis of Costs, Savings, and Best-practice Uses." *Energy Efficiency* 9(6). 1369–138.

Granderson, J., Fernandes, S., Singla, R., and Touzani, S. 2017. Corporate delivery of a global smart buildings program. *Energy Engineering* In Press.

Henderson, P., and Waltner, M. October 2013. *Real-Time Energy Management: A Case Study of Three Large Commercial Buildings in Washington, D.C.* Natural Resources Defense Council, CS:13-07-A.

Huang, S., and Zuo, W. 2014. Optimization of the Water-Cooled Chiller System Operation. *Proceedings of 2014 ASHRAE/IBPSA-USA Building Simulation Conference*, Atlanta, Georgia, United States, September 10–12. 300–307.

Julier, S. J. and Uhlmann, J. K. 1996. "A general method for approximating nonlinear transformations of probability distributions." *Robotics Research Group Technical Report* Department of Engineering Science, University of Oxford. 1–27.

Junior, C. S., Strupp, N. C., Lemke, N. C. and Koehler, J. 2009. "Modeling a Thermoelectric HVAC System for Automobiles." *Journal of Electronic Materials* 38: 1093–1097.

Katipamula, S., and M. Brambley. 2005. "Methods for fault detection, diagnostics, and prognostics for building systems – A review, part 1." *HVAC&R Research* 11(1): 3–25.

Kramer, H., Lin, G., Granderson, J., Curtin, C., and Crowe, E. 2017. Synthesis of year 1 outcomes in the Smart Energy Analytics Campaign [Internet]. Accessed on September 25, 2017 from https://smart-energy-analytics.org/

Lane, K., and L. Epperson (Ezenics. Inc.). 2013. *Enterprise Plug-and Play Diagnostics and Optimization for Smart Buildings.* California Energy Commission. Publication Number: CEC-500-2015-084.

Mills, E. 2011. Building commissioning: "A golden opportunity for reducing energy costs and greenhouse gas emissions in the United States." *Energy Efficiency* 4(2): 145–173.

Polak, E. 1997. "Optimization. Algorithms and consistent approximations." *Appl. Mth. Sci.* 124.

Pang, X., Wetter, M., Bhattacharya, P., and P. Haves. 2012. "A Framework for Simulation-based Real-time whole building performance assessment." *Building and Environment*, Volume 54. 100–108.

Philipson, N., Andreasson, J., Gäfvert, M. and Woodruff, A. 2008. Heavy Vehicles Modeling with the Vehicle Dynamics Library. Proceedings of the 6th International Modelica Conference.

Razak, A. A. 2010. Library Structure of Dynamic Simulation for Combined Heat and Power Plant in Modelica Language. Proceedings of The 2010 International Conference on Mechanical and Aerospace Engineering (ICMAE2010).

Roth, K. W., D. Westphalen, M. Y. Feng, P. Llana, and L. Quartararo. 2005. *Energy Impact of Commercial Building Controls and Performance Diagnostics: Market Characterization, Energy Impact of Building Faults and Energy Savings Potential.* Report prepared by TIAC LLC for the U.S. Department of Energy.

Sanyal, J., New, J. R., Edwards, R. E., and Parker, L. E. 2014. "Calibrating Building Energy Models Using Supercomputer Trained Machine Learning Agents." *Journal on Concurrency and Computation: Practice and Experience*, (26)13: 2122–2133.

Smith, D., Henritig, J., Pittenger, J., Bernard, R., Kofmehl, A., Levine, A., Flaco, G., Schmidt, K., Granderson, J., and Piette, M. A. 2011. Energy-smart buildings: Demonstrating how information technology can cut energy use and costs of real estate portfolios. Accenture.

Sun, K., Hong, T., Taylor-Lange, S., and Piette, M. A. 2016. "A Pattern-based Automated Approach to Building Energy Model Calibration." *Applied Energy* 165(1 March 2016): 214–224.

U.S. Energy Information Administration (EIA). 2012. Commercial Buildings Energy Consumption Survey (CBECS). Accessed on October 2, 2017 from https://www.eia.gov/consumption/commercial/data/2012/

Wiechert, W., Noack, S. and Elsheikh, A. 2010. Modeling Languages for Biochemical Network Simulation: Reaction vs. Equation Based Approaches. *Biosystems Engineering Ii: Linking Cellular Networks and Bioprocesses*, 121: 109–138.

Wetter, M. 2001. "GenOpt –A generic optimization program." Proceedings of the 7th IBPSA conference, Rio de Janeiro, Brazil. 601–8.

Wetter, M., Zuo, W., Nouidui, T. S., and Pang, X. 2014. "Modelica Buildings Library." *Journal of Building Performance Simulation* 7(4): 253–270.

# APPENDICES

## APPENDIX A: POINTS OF CONTACT

| POINT OF CONTACT Name | ORGANIZATION Name Address | Phone E-mail | Role in Project |
|---|---|---|---|
| Mary Ann Piette | LBNL, 1 Cyclotron Rd., Berkeley, CA 94720 | 510-486-6286 mapiette@lbl.gov | Principal Investigator |
| Jessica Granderson | LBNL, 1 Cyclotron Rd., Berkeley, CA 94720 | 510-486-6792 JGranderson@lbl.gov | Co-Principal Investigator |
| Christopher Crouse | NDW HQ | 202-257-9206 christopher.j.crouse@navy.mil | Liaison from NDW Headquarters |
| Rodney Milley | Public Works Department Utilities & Energy Mgmt. Branch, USNA 181 Wainwright Road Annapolis, 21402 NAVFAC Washington | 410-293-3185 rodney.milley@navy.mil | Branch Manager, Utilities and Energy Management |
| John Barton | Public Works Department Utilities & Energy Mgmt. Branch, USNA 181 Wainwright Road Annapolis, 21402 NAVFAC Washington | 410-293-1039 john.barton1@navy.mil | Liaison with all public works staff at USNA |
| Wellington W. Sullivan | Lead EMCS & CHWP Operator USNA - Annapolis Support Project | 410-293-3782 Wellington.W.Sullivan@iapws.com | Lead operator of facilities at USNA |
| Chi Chiu | Public Works Department Utilities & Energy Mgmt. Branch 181 Wainwright Road Annapolis, 21402 | 410-293-1045 chi.chiu@navy.mil | Mechanical Engineer |

## APPENDIX B: SOURCE CODE DESCRIPTION AND USE

This appendix describes the main features of the application source code implemented in the demonstration. This does not include a detailed description of the graphical user interface (GUI) design, but instead mainly covers the back end of the tool that performs the analytics for the demonstration.

The source code is located in a repository called "PlantInsight" at https://github.com/LBNL-ETA and is available under an open source license. All file paths in this appendix will be referenced to the home directory of the repository. The main scripts for the Django web framework API and FDD/Optimization algorithms are contained in ``/USNA_EIS/plant_insight/plant_insight``, while the main scripts for important utility functions, such as querying the database and managing model simulations and optimizations, are contained in ``/dependencies/dafne/django-dafne/dafne``. Simulation files for whole-plant models, used in the optimization, are kept in ``/USNA_EIS/simulators``, while Functional Mockup Unit (FMU) files for component simulation, used in the FDD, are kept in ``/USNA_EIS/FMUs``.

### B.1 Deployment

Deploying PlantInsight makes use of Docker containers. A container is a stand-alone package of software required to run a particular application, including the operating system and any extra software on which the package application may rely. The container is run using the Docker software, which can be installed on a host computing platform and operating system. Docker container fundamentals are outside the scope of this guide; see https://www.docker.com/ for more information.

In this demonstration, two separate Docker containers are used; one for a PostgreSQL database and one for the web-service, optimization/FDD algorithm, and GUI applications. This latter container is called the *application container*. Docker containers are run using images and can be started or stopped. An image is created using a dockerfile, which contains lines of commands to instruct the creation of the image, including the gathering, compiling, and installing of the required software components. The files associated with docker image creation of PlantInsight can be found in ``/Dockers``. However, to ease deployment, the docker images for PlantInsight have already been created. The PostgreSQL container must be running before the application container can run.

### B.2 Scheduled Tasks

While functionality of the tool can be invoked using the web interface, a number of tasks were scheduled to be invoked daily in order to update the state of the data contained in the tool and run analytics for operators to use. These tasks were scheduled using the *cron* program on the Linux machine on which the tool is deployed. Specifically, the *cron* program calls a python script that sends a web command to the tool to initiate a task to update all of the data. This task was invoked in the module ``/USNA_EIS/plant_insight/plant_insight/views_development.py`` with the function ``update_all_data``. This function calls from the module

``/USNA_EIS/plant_insight/plant_insight/tasks.py`` the function ``update_all_data``. This function then invokes the running of the following task functions within the same module: ``update_support_data``, ``run_fdd_chiller_cycling``, ``run_fdd_fan_cycling``, ``update_regression_model``, ``update_forecasted_data``, and ``optimize_cwsp_no_changes``. More detailed descriptions of these tasks are grouped into the three sections below according to update_support_data, FDD, and condenser water setpoint optimization.

### B.3 Update_support_data

This task is to create the 5-min interval data from the building automation system that is needed by the FDD and optimization algorithms and the GUI. Calculations and mappings are applied in this task. Table B-1 summarizes the main functions and their purposes.

*Table B- 1. Main functions and purposes of the task "update_support_data"*

| **Functions** | **Function purpose** |
|---|---|
| convert_temperatures.s() | Convert temperature variables from degrees F to degrees C and K |
| convert_mass_flow_rates.s () | Convert mass flow rates into SI units kg/s |
| compute_tower_speed.s () | Compute the speed of cooling tower fans |
| compute_electric_power.si() | Compute the chiller electric power given the currents and the voltages |
| convert_cooling_loads.si () | Convert the cooling loads into tons |
| compute_kW_per_tons.s() | Compute the kW/ton for the chillers |
| compute_COP.s() | Compute the COP of the chillers |
| compute_plant_power.s() | Compute the overall electric power of the plants |
| compute_overall_campus_cooling_load.s() | Compute the total campus cooling load |
| data_cleaning_and_steady_state_analysis.s() | Filter out the outliers from data, and correct bias in the temperature measurements |

### B.4 Fault Detection and Diagnosis

Two algorithms are used to detect faults for tower fan cycling and chiller cycling. If faults are identified, they are managed by the FaultManager, a class in the ``/USNA_EIS/plant_insight/plant_insight/fault_detection/fault_manager.py`` module, and stored in the database. FaultManager is used to store, modify, and query information about identified faults, including site, component, type, gravity, start and end time, wasted energy, wasted money, and description stored as document objects in the postgres database.

1. Tower fan cycling

The tower fan cycling algorithm is called by the function run_fault_detection_fan_cycling. This function calls the ``run`` function of the module ``/USNA_EIS/plant_insight/plant_insight/fault_detection/fault_fan_cycling.py`` for a specified start time, end time, and plant. The function invokes the ``detectFanCycling`` function from the module ``/USNA_EIS/plant_insight/plant_insight/fault_detection/detectFanCycling.py``, supplying a time series of tower VFD percentage over the time period specified at five-minute intervals. Identified faults are handled by the FaultManager. See Section 2.2.2.2 in the main body of the report for more information on the tower fan cycling algorithm.

2. Chiller cycling

The chiller cycling algorithm is called by the function ``run_fdd_chiller_cycling``. This function calls the ``run`` function of the module ``/USNA_EIS/plant_insight/plant_insight/fault_detection/fault_chiller_cycling.py`` for a specified start time, end time, and chiller. The function invokes the ``detectCHCycling`` function from the module ``/USNA_EIS/plant_insight/plant_insight/fault_detection/detectCHCycling.py``, supplying a time series of each chiller compressor power over the time period specified at five-minute intervals. Identified faults are handled by the FaultManager. See Section 2.2.2.2 in the main body of the report for more information on the chiller cycling algorithm.

## B.5 Optimization

The optimization involves two primary steps: (1) getting forecasted data and using the load prediction model to predict load and (2) running the optimization algorithm.

1. Get forecasted data and predict load

Getting the forecasted data involves obtaining the forecasted weather data and predicting the load. This process is invoked in the module ``/USNA_EIS/plant_insight/plant_insight/tasks.py`` by the function ``update_forecasted_data``, which first calls the function ``update_weather_data``, which then calls the function ``update_forecast_data``, all in the same module. ``update_forecast_data`` calls the weatherunderground API for updated forecast data. This function then converts these data into pandas dataframes and stores them in the forecast table of the database.

After getting forecast data, the function ``update_forecasted_data`` calls the function ``predict_plant_load`` located in the same module, which uses the forecasted data to predict the plant cooling load. All functions used to build and evaluate the plant load prediction model are located in the module ``/USNA_EIS/plant_insight/plant_insight/regression/regression.py``. The regression model uses a linear combination of a bias, minute, hour, outside air temperature, and day of week to predict the plant load. The weights of the linear combination are trained by linear least squares using past data of measured plant total load and the input variables in the function

``build_regression_model``. A new model is trained for each month, which means each month's model contains different weights. The updating for each month is performed by the function ``update_regression_model``, located in ``/USNA_EIS/plant_insight/plant_insight/tasks.py``.

The plant load is predicted using the ``predict_load`` function in ``/USNA_EIS/plant_insight/plant_insight/regression/regression.py``. The actual calculation of this is performed in the function ``regression_power`` in the same script. To predict the load, the forecasted values of the input variables, already collected as described above, are fed into the model. To guard against unrealistic predictions, if the predicted load is outside the range of loads used to train the specific month's model, then the previous or next month's model is used. Use of the previous model versus the next month's model depends on whether the predicted load is too high or too low, and whether the season is fall or spring. If the predicted load is too high and the season is fall, then the previous month's model is used. If the predicted load is too low and the season is fall, then the next month's model is used. If the predicted load is too high and the season is spring, then the next month's model is used. If the predicted load is too low and the season is spring, then the previous month's model is used.

The final piece of load prediction is splitting the total predicted load into loads for Rickover and Lejeune. This is performed by the functions ``split_load_rick`` and ``split_load_lej``, also in the ``/USNA_EIS/plant_insight/plant_insight/regression/regression.py`` module. The total predicted load is split to Rickover by a piecewise linear approximation as a function of total load, presented in Equations B-1 and B-2 below. The Lejeune load is taken as the remaining difference between the total load the calculated Rickover load. The predicted loads are stored in the forecast table of the database.

The load split for the plant is as follows:

| | |
|---|---|
| LoadRick=*LoadTotal | (B-1) |
| LoadLejeune=LoadTotal-LoadRick | (B-2) |
| =1.0 if LoadTotal<6000e3 | (B-2a) |
| =1.0-0.4*(LoadTotal-6000e3)/100e3 if 6000e3<LoadTotal<6100e3 | (B-2b) |
| =0.6 if 6100e3<LoadTotal<19000e3 | (B-2c) |
| =0.6-0.2*(LoadTotal-19000e3)/1000e3 if 19000e3<LoadTotal<20000e3 | (B-2d) |
| =0.4 if 6100e3<LoadTotal<19000e3 | (B-2e) |

2. Run optimization algorithm

Once the forecast data are obtained and the load is predicted for each plant, the optimization is invoked. All functions for the optimization are in the module ``/USNA_EIS/plant_insight/plant_insight/optimization/optimization_all.py``. In the module ``/USNA_EIS/plant_insight/plant_insight/tasks.py``, the function ``optimize_cwsp_no_changes`` executes the optimization. This function calls the optimization function ``run_optimization_no_changes`` for either the Rickover or Lejeune plants, whichever is specified. This function prepares data output dictionaries and calls the function ``run_optimization``, which prepares the input data and finally invokes the function ``run_genopt_optimization`` to solve the optimization problem. Note that

``run_optimization_no_changes`` applies the assumption that the setpoint temperature is to be constant over the optimization time horizon.

The function ``run_genopt_optimization`` creates table files from the forecasted load, outside air drybulb temperature, relative humidity, and atmospheric pressure, to be used as inputs to the Modelica model used for optimization, found in the ``/USNA_EIS/simulators`` directory. The function then simulates the model using the baseline condenser water setpoint temperature to obtain a predicted baseline power consumption over the optimization period. Then, the function writes configuration files for optimization in GenOpt and invokes GenOpt to solve the optimization problem and find the optimal condenser water temperature. Finally, the optimal condenser water setpoint is used to run a final simulation to obtain the predicted optimized power consumption, and all results are stored in the analytics table of the database.

## APPENDIX C: USER SATISFACTION SURVEY

1. What systems are currently used to manage plant operations and plant energy use?
- Anything other than the Metasys kiosk? Please specify any others.

2. PlantInsight capabilities and user satisfaction:

| **PlantInsight capabilities** | **Does this capability exist in the tools currently at USNA? (Y/N)** | • **If Y, is your satisfaction with PlantInsight: lower, equal to, or greater than with your current system?** | • **If N, is your satisfaction with PlantInsight: high, low, or neutral?** |
|---|---|---|---|
| Visualization and plotting of plant load data | | | |
| Visualization and plotting of efficiency curves (kw per ton vs. tons) | | | |
| Quantification plant energy consumption | | | |
| Chiller runtime and energy use summary statistics | | | |
| Control of plant operational parameters | | | |
| Estimation of central plant utility/operational costs | | | |
| Central plant load forecasting | | | |
| Weather forecasting | | | |
| Fan cycling fault detection | | | |
| Chiller cycling fault detection | | | |
| Optimization of central plant setpoints | | | |
| Quantification of cost of faults | | | |
| Quantification of operating costs for different plant setpoints | | | |

3. Of the capabilities provided in PlantInsight, which are most valuable to the USNA operational and energy management team? Select 3-5, marking with an “X”.

| **PlantInsight system capabilities** | **Highest value to USNA operational and energy management team** |
|---|---|
| Visualization and plotting of plant load data | |
| Visualization and plotting of efficiency curves (kw per ton vs. tons) | |
| Quantification plant energy consumption | |
| Chiller runtime and energy use summary statistics | |
| Quantification of plant operational costs | |
| Control of plant operational parameters | |
| Estimation of central plant utility costs | |
| Central plant load forecasting | |
| Weather forecasting | |
| Fan cycling fault detection | |
| Chiller cycling fault detection | |
| Optimization of central plant setpoints | |
| Quantification of cost of faults | |
| Quantification of operating costs for different plant setpoints | |

4. How would you rate your satisfaction with the PlantInsight user interface, on a scale of 1-5, with 3 being neutral, 1 being not satisfied, and 5 being highly satisfied?

5. How would you rate your satisfaction with the PlantInsight fault detection and optimization outputs, scale of 1-5 with 3 being neutral, 1 being not satisfied, and 5 being highly satisfied.

6. Overall, how would you rate your satisfaction with the PlantInsight tool, scale of 1-5 with 3 being neutral, 1 being not satisfied, and 5 being highly satisfied.

7. In what ways does the PlantInsight tool improve your ability to operate the plant more effectively?

8. How could the tool be improved to provide more value to plant operations or energy management? This might be user interface related, new features/capabilities, or improvements to existing features/capabilities.

## APPENDIX D: COST MODEL AND LIFE-CYCLE COST ANALYSIS FOR PLANTINSIGHT (NIST BLCC 5.3-17: COMPARATIVE ANALYSIS)

Consistent with Federal Life-Cycle Cost Methodology and Procedures, 10 CFR, Part 436, Subpart A

Base Case: Keep Existing System
Alternative: Install PlantInsight System

### General Information

| | |
|---|---|
| **Project Location:** | Maryland |
| **Analysis Type:** | MILCON Analysis, Energy Project |
| **Analyst:** | JGG |
| **Comment** | ESTCP demonstration at Annapolis, MD |
| **Base Date:** | April 1, 2017 |
| **Beneficial Occupancy Date:** | April 1, 2018 |
| **Study Period:** | 11 years 0 months (April 1, 2017 through March 31, 2028) |
| **Discount Rate:** | 3% |
| **Discounting Convention:** | Mid-Year |

*Table D- 1. Comparison of Present-Value Costs*

| ***PV Life-Cycle Cost*** | Base Case | Alternative | Savings from Alternative |
|---|---|---|---|
| Initial Investment Costs: | | | |
| Capital Requirements as of Base Date | $0 | $34,601 | -$34,601 |
| Future Costs: | | | |
| Energy Consumption Costs | $20,040,495 | $19,733,293 | $307,202 |
| Energy Demand Charges | $0 | $0 | $0 |
| Energy Utility Rebates | $0 | $0 | $0 |
| Water Costs | $0 | $0 | $0 |
| Routine Recurring and Non-Recurring OM&R Costs | $0 | $57,827 | -$57,827 |
| Major Repair and Replacements | $0 | $0 | $0 |
| Residual Value at End of Study Period | $0 | $0 | $0 |
| Subtotal (for Future Cost Items) | $20,040,495 | $19,791,120 | $249,375 |
| Total PV Life-Cycle Cost | $20,040,495 | $19,825,721 | $214,774 |

*Table D- 2. Net savings from Alternative compared with Base Case*

| PV of Non-Investment Savings | **$249,375** |
|---|---|
| (less) Increased Total Investment | $34,601 |
| Net Savings | $214,774 |

Savings-to-Investment Ratio (SIR)

**SIR** 7.21

Adjusted Internal Rate of Return

**AIRR =** 23.26%

**Payback Period**

Estimated Years to Payback (from beginning of Beneficial Occupancy Period)

**Simple Payback occurs in year** 1

**Discounted Payback occurs in year** 1

*Table D- 3. Energy Savings Summary*

| Energy | Average | Annual | Consumption | Life-Cycle |
|---|---|---|---|---|
| Type | **Base Case (kWh)** | **Alternative (kWh)** | **Savings (kWh)** | **Savings (kWh)** |
| Electricity | 31,442,429.0 | 31,007,643.0 | 434,786.0 | 4,347,264.8 |

*Table D- 4. Energy Savings Summary (in MBtu)*

| Energy | Average | Annual | Consumption | Life-Cycle |
|---|---|---|---|---|
| Type | **Base Case (MBtu)** | **Alternative (MBtu)** | **Savings (MBtu)** | **Savings (MBtu)** |
| Electricity | 107,286.0 | 105,802.4 | 1,483.6 | 14,833.5 |

*Table D- 5. Emissions Reduction Summary*

| Energy | Average | Annual | Emissions | Life-Cycle |
|---|---|---|---|---|
| Type | **Base Case (kg)** | **Alternative (kg)** | **Reduction (kg)** | **Reduction (kg)** |
| Electricity | | | | |
| $CO_2$ | 20,737,712.14 | 20,450,951.00 | 286,761.14 | 2,867,218.89 |
| $SO_2$ | 166,755.74 | 164,449.84 | 2,305.90 | 23,055.83 |
| NOx | 37,585.14 | 37,065.41 | 519.73 | 5,196.56 |
| Totals: | | | | |
| $CO_2$ | 20,737,712.14 | 20,450,951.00 | 286,761.14 | 2,867,218.89 |
| $SO_2$ | 166,755.74 | 164,449.84 | 2,305.90 | 23,055.83 |
| NOx | 37,585.14 | 37,065.41 | 519.73 | 5,196.56 |

## APPENDIX E: RESOURCES ON MODEL CREATION AND CALIBRATION

The following resources can be used to learn more about Modelica model creation and calibration:

Equation-based languages - A new paradigm for building energy modeling, simulation and optimization. Michael Wetter, Marco Bonvini and Thierry S. Nouidui.

- Available at: http://simulationresearch.lbl.gov/wetter/download/LBNL-1003383.pdf

Generic Optimization Program Overview. Lawrence Berkeley National Laboratory.

- Available at: https://simulationresearch.lbl.gov/GO/overview.html

Modelica Building Library User Guide. Lawrence Berkeley National Laboratory.

- Available at: https://simulationresearch.lbl.gov/modelica/userGuide/index.html

Modelica by Example. Michael M. Tiller.

- Available at: http://book.xogeny.com/

Tools and Techniques to Calibrate Electric Chiller Component Models. Mark Hydeman and Kenneth L. Gillespie

- Available at: https://lms.i-know.com/pluginfile.php /28938/mod_resource/content/172/ Tools%20and%20Techniques%20to%20Calibrate%20Electric%20Chiller%20Component%20Models.pdf (where %20 indicates blank space)

## APPENDIX F: PLANTINSIGHT USER GUIDE

The PlantInsight tool is accessed by users via a graphical user interface (GUI). This section describes how to access and use the GUI to obtain information from the tool.

### F.1 Start the PlantInsight Application

Open a web browser and enter the URL to access the PlantInsight GUI. (Currently the URL is https://plantinsight.lbl.gov, but this may change when the application is transferred from LBNL servers to other locations.) The PlantInsight login page is displayed (Figure F-1). Enter username and password and log into the tool.

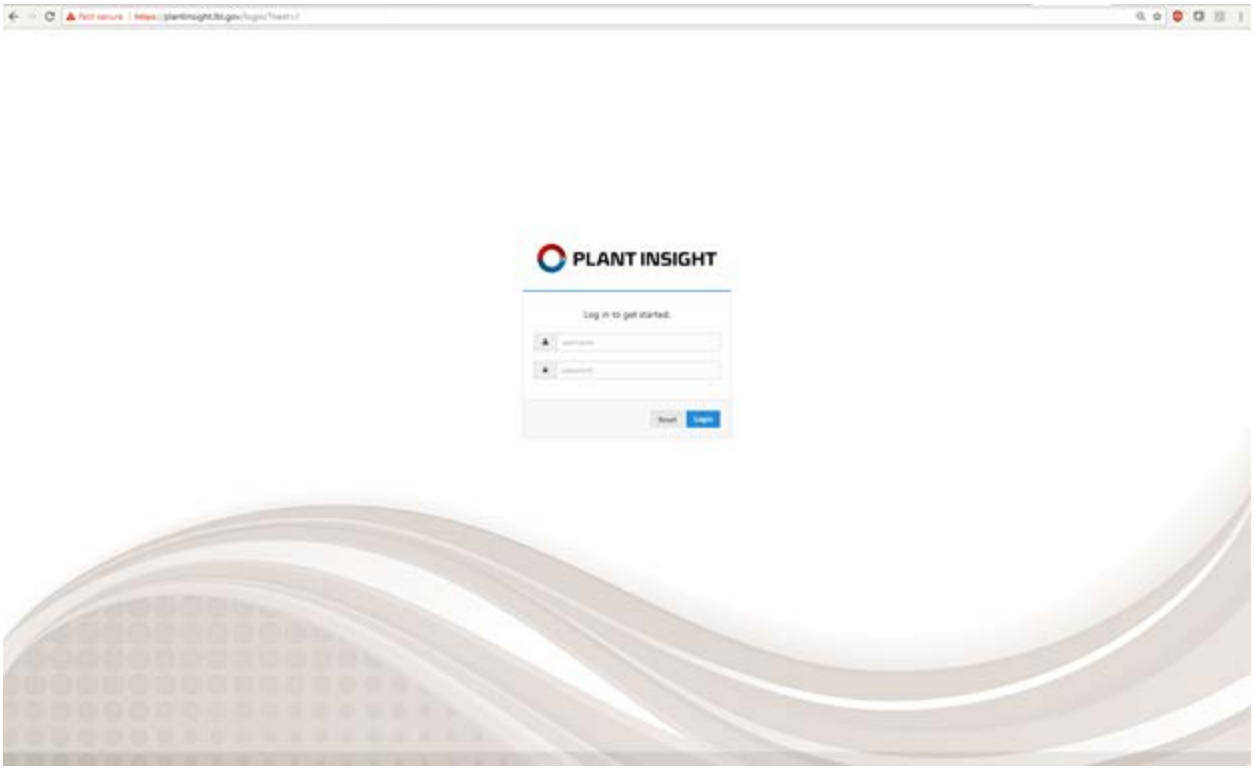


*Figure F- 1. PlantInsight login page*

### F.2 Landing Page Dashboard of PlantInsight

Once logged in, the user will be directed to the dashboard landing page of the PlantInsight tool, shown in Figure F-2.

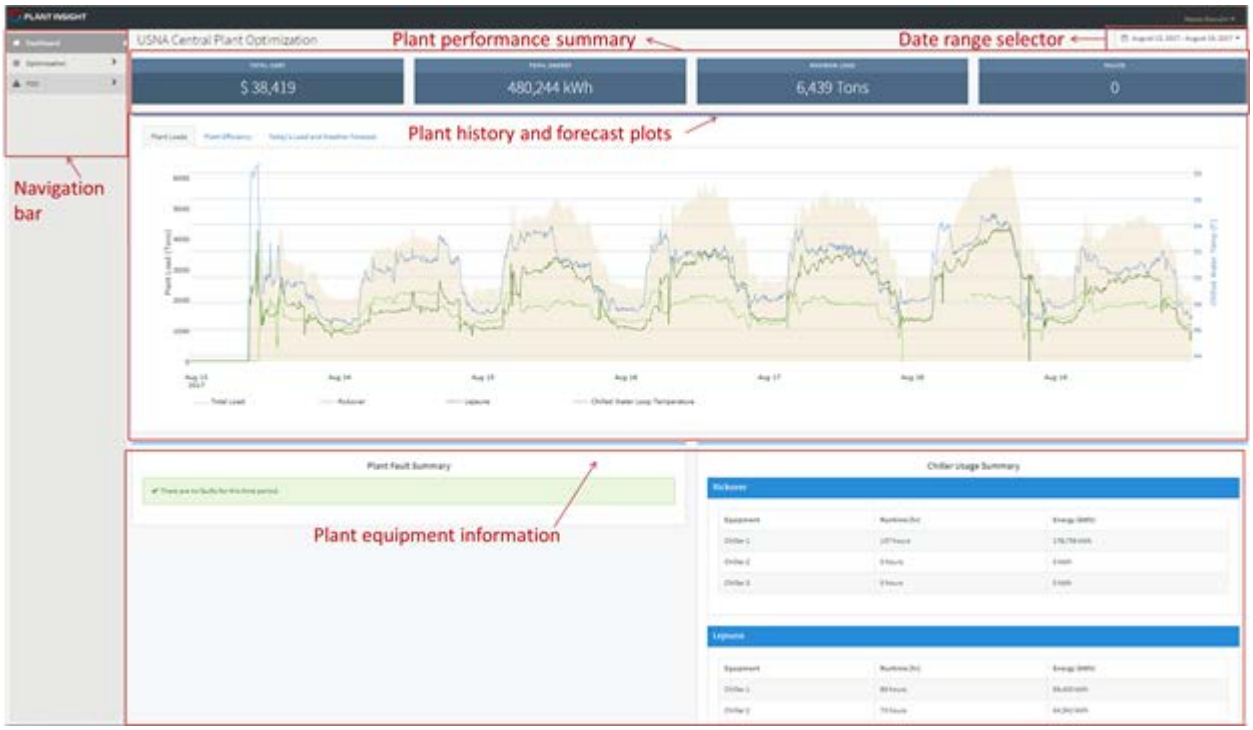


*Figure F- 2. PlantInsight dashboard landing page*

The dashboard that comprises the landing page dashboard is split into five principal regions.

On the top left (Figure F-2), the user will find a navigation bar. The navigation bar (Figure F-3) allows the user to navigate between different elements of the tool: Dashboard, Optimization, and FDD. The optimization element shows the condenser water temperature setpoint optimization results at Rickover and Lejeune plants. The FDD element provides the overview and specifics of fault detection results.

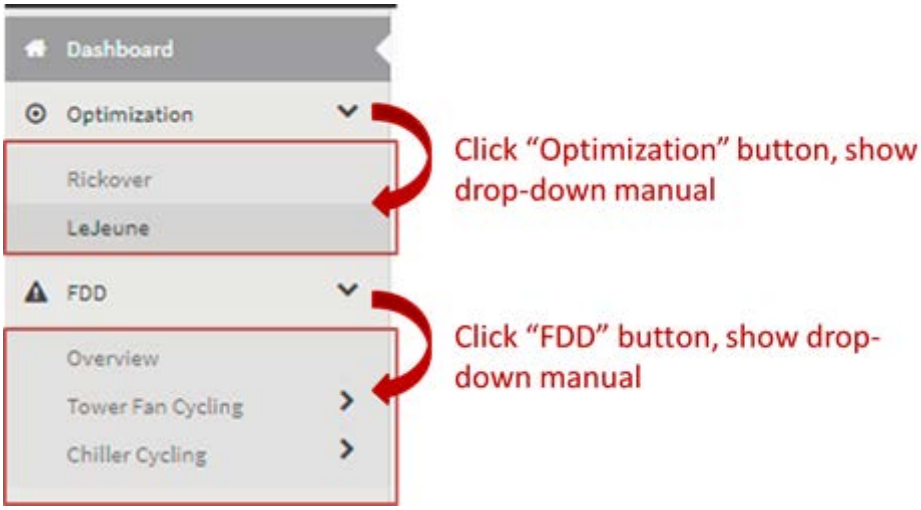


*Figure F- 3. Navigation bar of the landing page*

At the top right side of the screen, the user will find a date range selector. By clicking on the date range selector, the user can select the date range over which the performance analysis will be conducted. When first opened, the tool defaults to the previous 7 days (Figure F-4).

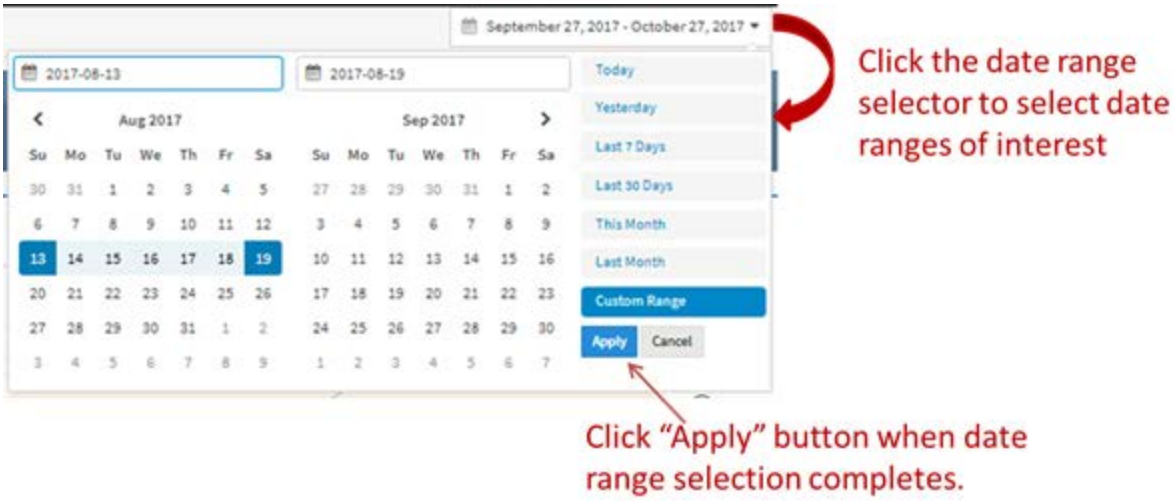


*Figure F- 4. Date range selector at the top right of the landing page*

Above the plot region (see Figure F-2), plant performance during the selected time period is summarized in blue boxes, including the total costs of the cooling delivered, total energy consumed to deliver the cooling, the maximum load in tons, as well as the number of faults observed over the period.

In the center of the landing page, there are three plant history and forecast plots. The first is a graph of the plant load history (Figure F-5). It shows the load served by the Rickover plant (light green line) and Lejeune plant (dark green line), the total cooling load of the entire campus (brown shading), as well as the chilled water leaving temperature at the primary chilled water loop (blue line). To see a shorter duration of the plant load history, simply click and drag the period of interest, and the plot will automatically zoom to that period (Figure F-6). Double-click the plot to zoom out, then the plot will resize to the original time period. Mouse over any portion of the plot to see the value of each parameter displayed in the plot.

*Figure F- 5. Plant load history plot at the center of the landing page*

*Figure F- 6. Zoom-in feature of the plant load history plot*

In the center of the landing page, click the "Plant efficiency" tab to see the history of plant history efficiency. The scatter plot (Figure F-7) shows plant efficiency (kW/ton) against plant cooling power (in tons). Click "Today's Load and Weather Forecast" to see the predicted outside air temperature (blue line) and predicted total cooling load for the entire campus (light brown shading) in the next 24 hours (Figure F-8).

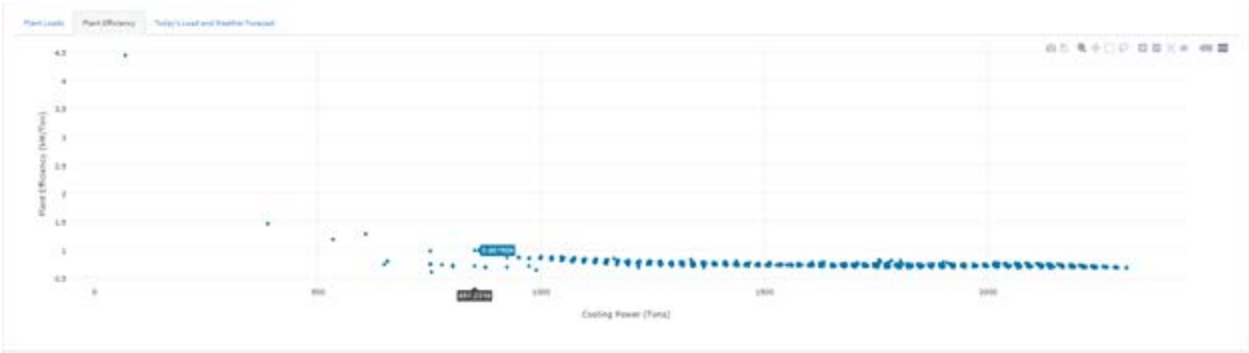

*Figure F- 7. Plant efficiency history plot at the center of the landing page*

*Figure F- 8. Today's load and weather forecast plot at the center of the landing page*

At the bottom of the landing page, there is more information about the performance of specific equipment in the plant (Figure F-9). This includes a plant fault summary and two tables highlighting the runtime hours and energy consumed by each chiller at the Rickover and Lejeune plants.

Plant Fault Summary

✔ There are no faults for this time period.

Chiller Usage Summary

Rickover

| Equipment | Runtime (hr) | Energy (kWh) |
|---|---|---|
| Chiller 1 | 157 hours | 178,759 kWh |
| Chiller 2 | 0 hours | 0 kWh |
| Chiller 3 | 0 hours | 0 kWh |

Lejeune

| Equipment | Runtime (hr) | Energy (kWh) |
|---|---|---|
| Chiller 1 | 89 hours | 99,435 kWh |
| Chiller 2 | 70 hours | 64,542 kWh |
| Chiller 3 | 90 hours | 81,919 kWh |

*Figure F- 9. Plant fault (top) and equipment (bottom) summary, shown in the lower portion of the landing page*

## F.3 Optimization

By going to the navigation bar and clicking the "Optimization" button, the user will find a drop-down menu to access the optimization results for the Rickover and Lejeune plants (Figure F-3). The optimization feature of PlantInsight tool uses physics-based modelling algorithms to determine the optimal condenser water setpoint for the plant.

Click the "Rickover" button to see the optimization results for the Rickover plant (Figure F-10).

In the upper plot of Figure F-10, the model-determined optimal setpoint (orange line) is shown, along with the conventional actual setpoint (green line) in degrees F for the upcoming day. The conventional setpoint is an annual constant under current operational strategies, and is also shown. The forecasted wet bulb temperature (blue line) is also plotted. In the lower plot, for a time period specified by the user, the actual measured power (orange line) and the predicted power (green line) that would have been consumed under the model-determined optimal

condenser water temperature setpoint (green line in the upper plot) is shown. This predicted optimized power is calculated as a percentage of measured power, where the percentage is calculated from the ratio of model-determined optimal power to model-determined baseline power. Therefore, if the optimal setpoint were actually implemented, the user would expect to see the actual measured power and optimal predicted power trends overlap.

As for other plots in the tool, the user can mouse over the plot to see the values of parameters attributed to each timestamp.

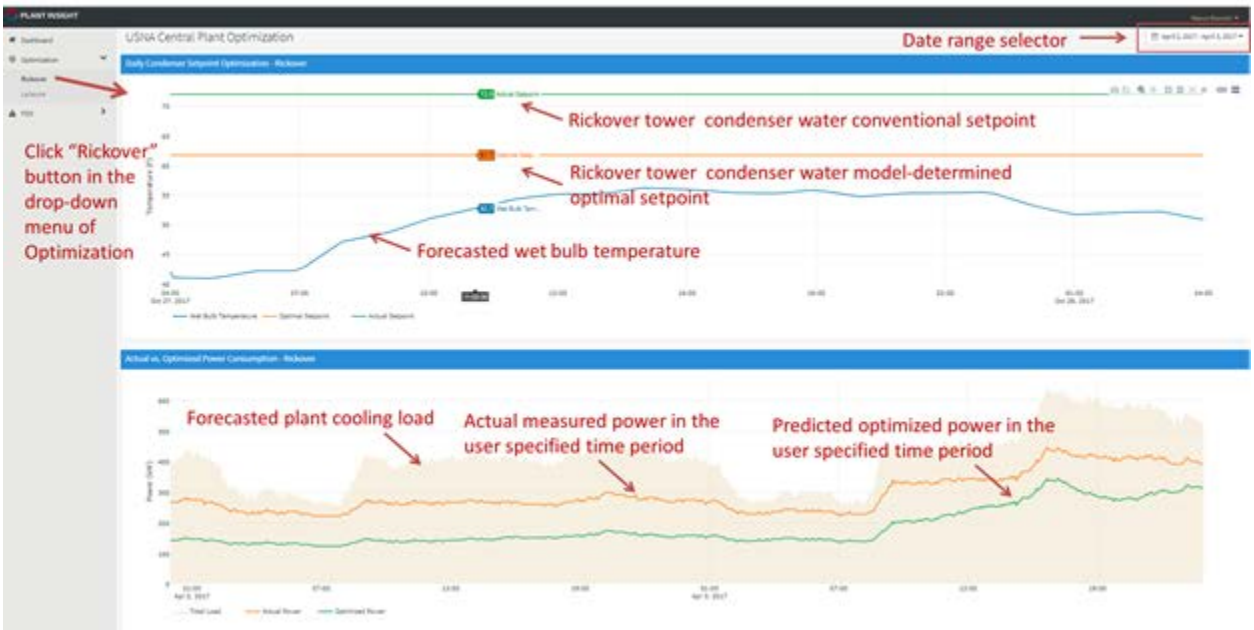


*Figure F- 10. Optimization results page for the Rickover plant*

Clicking the "Lejeune" button, shows the optimization results of Lejeune plant (Figure F-11), following the same conventions as those shown in Figure F-10.

*Figure F- 11. Optimization page for the Lejeune plant*

## F.4 Fault Detection and Diagnosis (FDD)

By going to the navigation bar and clicking the "FDD" button, the user will find a drop-down menu to access an FDD (fault detection and diagnosis) overview and details on Tower Fan Cycling, and Chiller Cycling (Figure F-3).

The FDD overview page is divided into two sections: Tower Fan Cycling and Chiller Cycling (Figure F-12). Similar to other pages, user can select the date range over which to conduct the FDD analysis. Boxes are used to represent each chiller and tower in the two plants. A color convention is used to indicate whether or not a specific chiller or tower is faulting during the user-selected dates. A green box indicates the plant equipment is running normally and no cycling fault is detected. A red box indicates cycling faults are detected. Within the box, the user can see the number of cycling faults detected.

*Figure F- 12. The FDD overview page*

*Figure F- 13. The equipment-specific fault drill-down page*

By clicking on the equipment box in the FDD overview page or the equipment name under the drop-down manual of Tower Fan Cycling and Chiller Cycling in the navigation bar, the user will be directed to the equipment specific fault drill-down page (Figure F-13). On this page, the user will see two plots: equipment energy (the upper plot) and equipment power (the lower plot). Periods of detected cycling are indicated in vertical bars shaded pink.

## APPENDIX G: ACTION ITEMS

Following the February 2013 In-Progress Review (IPR) meeting we were asked to please discuss the following in the final report:

- The role of the plant operators in attaining potential energy efficiency improvements. Be sure to include incentives and disincentives for plant operators to adopt new technologies.
- The variables that exist within your instrumentation plan that have the greatest impact on outcome and what you would do to improve data collection in the future which will improve the algorithms used in the project.
- The delineation of energy savings that will occur from the use of a smaller, more-efficient chiller in the winter compared to the chiller operation based on the modeling used in the project.
- The possibility of extending the model to determine how to use chilled water for energy storage to conduct peak shaving.

These action items were largely associated with our experiences to date (February 2013) at the Washington Navy Yard. Ultimately, the demonstration was moved to USNA, rendering the third bullet inapplicable. The others are addressed below:

*Role of plant operators:* Plant operators are critical in attaining potential efficiency improvements. They must implement the recommended optimal setpoints from the PlantInsight tool and use the tool to monitor for and address any detected faults. The largest incentive to adopt the new technology include direct recognition of and accounting for more efficient operations, and associated utility cost savings. This incentive is supported within PlantInsight through the tool's estimates of potential savings and cost impacts—quantities which otherwise are not available in conventional operational tools. Staff at USNA showed great willingness and interest in the demonstration technology because it provides a daily update of the optimal setpoint, along with a summary of any faults detected in the equipment, and critical operational key performance indicators (KPIs). This appears to be well-aligned with their goal of providing excellent service to the inhabitants of the buildings on site that make the most efficient use of the available equipment, including the prompt identification of any cycling issues that may arise.

Disincentives may include the additional "lift" required to use a new tool and implement daily changes in system setpoints. This disincentive is mitigated through daily automated notification of optimal setpoints for the day, and by explicitly incorporating into the tool the savings feedback and KPI tracking that serve as incentives and that the operational staff requested to be built into the technology.

*Impactful instrumentation:* Discussed in the Cost Model and Cost Drivers sections (7.1 and 7.2 of the main body of the report), the most important instrumentation required for the Modelica optimization models that may not always be commonly available is chiller flow meters. Power measurements and temperature sensors used in the models and algorithms are often commonly installed as part of the monitoring infrastructure. Where not directly metered, power consumption of fans and pumps can be calculated from their status or speed. These data are

important to keep relatively well calibrated so that models can be calibrated, and data are reflective of actual plant operations, as described in Section 5 above. However, there is some flexibility in the system, as indicated in the demonstration. Even imperfectly calibrated models for some chillers and towers were able to be used to strong effect to obtain savings relative to baseline practices.

*Chilled water storage for peak shaving:* While not within the scope of this specific demonstration, or in the infrastructure at the USNA, Modelica could be used to model the demand savings from using thermal storage to limit the power demands to produce chilled water during peak periods. The model could include representations of the physical tank storage and pumps, as well as representations of controls for charging and discharging schemes. These schemes may be based on time schedules and/or operating conditions.

Following the June 2014 IPR we were asked to include the following in the Final and Cost & Performance reports:

- Discuss the trade-off costs to determine the amount of monitoring and instrumentation to install for Modelica customization to enable the system to work optimally.
- Discuss the sensitivity of the efficiency gains, GHG reductions, etc. to the chosen baseline year. For example, how does average temperature of the baseline year affect future calculated efficiency gains?

*Trade-offs in cost and monitoring instrumentation:* The response to this question is equivalent to that for "Impactful Instrumentation" from the 2013 IPR. Discussed in the Cost Model and Cost Drivers sections 7.1 and 7.2 of the main body of the report, the most important instrumentation required for the Modelica optimization models that may not always be commonly available is chiller flow meters. Power measurements and temperature sensors used in the models and algorithms are often commonly installed as part of the monitoring infrastructure. Where not directly metered, power consumption of fans and pumps can be calculated from their status or speed. These data are important to keep relatively well calibrated so that models can be calibrated, and data are reflective of actual plant operations, as described in Section 5 above. However, there is some flexibility in the system, as indicated in the demonstration. Even imperfectly calibrated models for some chillers and towers were able to be used to strong effect to obtain savings relative to baseline practices.

*Sensitivity of efficiency gains and GHG reductions to the chosen baseline year*: The temperature of the baseline year does influence the total load on the plant, and therefore, the energy consumption of the plant in the baseline year. Changes in weather conditions from one year to the next are often accounted for by normalizing savings to Typical Meteorological Year (TMY) data. The savings analysis presented in Section 6.1.2 of the main body of the report showed that savings were most driven by wet bulb as opposed to dry bulb temperature. The efficiency gains attributed to the optimization will be less sensitive to year-to-year local fluctuations in weather than they are to climatic variations—in a dry climate, savings potential during periods of higher plant loading (summer) could be much higher, resulting in larger achievable absolute savings, and larger annual relative (percent) savings.

Following the Fall 2016 IPR we were asked to:

- Discuss the steps to take, between now and the end of project, to provide for the ongoing operation and maintenance of the technology beyond the completion of the demonstration project. If USNA staff intend to continue using the technology, what documentation, training or other resources are necessary to ensure that the technology continues to provide the demonstrated efficiency improvements to the chiller plant operations?
- Explain the plans or outlook for the technology developed and demonstrated in this project to become commercialized or otherwise become available to other DoD installations. What are the potential pathways to technology transfer and what can be done between now and the end of the project to better position the technology for transition?

These action items were addressed in a memo to the ESTCP program in January 2017, and are also addressed in the Implementation Issues in Section 8 of the main body of the report.