The CERTS Microgrid Concept, as Demonstrated at the CERTS/AEP Microgrid Test Bed

Authors and Contributors:

Joseph H. Eto[1], Robert Lasseter[2], David Klapp[3], Amrit Khalsa[4], Ben Schenkman[5], Mahesh Illindala[6], and Surya Baktiono[4]

[1] Lawrence Berkeley National Laboratory
[2] University of Wisconsin
[3] Advanced Microgrid Systems
[4] American Electric Power
[5] Sandia National Laboratories
[6] Ohio State University

Energy Analysis and Environmental Impacts Division

Lawrence Berkeley National Laboratory

September 2018

This work was supported by the U.S. Department of Energy's Office of Electricity, in accordance with the terms of Lawrence Berkeley National Laboratory' Contract No. DE-AC02-05CH11231.

Disclaimer

This document was prepared as an account of work sponsored by the United States Government. While this document is believed to contain correct information, neither the United States Government nor any agency thereof, nor The Regents of the University of California, nor any of their employees, makes any warranty, express or implied, or assumes any legal responsibility for the accuracy, completeness, or usefulness of any information, apparatus, product, or process disclosed, or represents that its use would not infringe privately owned rights. Reference herein to any specific commercial product, process, or service by its trade name, trademark, manufacturer, or otherwise, does not necessarily constitute or imply its endorsement, recommendation, or favoring by the United States Government or any agency thereof, or The Regents of the University of California. The views and opinions of authors expressed herein do not necessarily state or reflect those of the United States Government or any agency thereof, or The Regents of the University of California.

Ernest Orlando Lawrence Berkeley National Laboratory is an equal opportunity employer.

Copyright Notice

This manuscript has been authored by an author at Lawrence Berkeley National Laboratory under Contract No. DE-AC02-05CH11231 with the U.S. Department of Energy. The U.S. Government retains, and the publisher, by accepting the article for publication, acknowledges, that the U.S. Government retains a non-exclusive, paid-up, irrevocable, worldwide license to publish or reproduce the published form of this manuscript, or allow others to do so, for U.S. Government purposes.

The CERTS Microgrid Concept, as Demonstrated at the CERTS/AEP Microgrid Test Bed

Prepared for the
Office of Electricity
U.S. Department of Energy

Principal Investigator
Joseph H. Eto, Lawrence Berkeley National Laboratory

Project Team
Robert Lasseter, University of Wisconsin
David Klapp, Advanced Microgrid Systems
Amrit Khalsa and Surya Baktiono, American Electric Power
Ben Schenkman, Sandia National Laboratories
Mahesh Illindala, Ohio State University

Ernest Orlando Lawrence Berkeley National Laboratory
1 Cyclotron Road, MS 90R4000
Berkeley CA 94720-8136

September 2018

This work was supported by the U.S. Department of Energy's Office of Electricity, in accordance with the terms of Lawrence Berkeley National Laboratory' Contract No. DE-AC02-05CH11231.

Acknowledgments

The CERTS Microgrid Project has been sponsored by both the U.S. Department of Energy (DOE) and the California Energy Commission (CEC). The project team is grateful for the consistent support and guidance provided by DOE project managers Phil Overholt, Joe Galdo, Poonum Agrawal, Steve Waslo (Chicago), Merrill Smith, and Dan Ton, and by CEC project managers Mark Rawson and Bernard Treanton.

The team also acknowledges technical advice on the original test bed provided by Mark McGranaghan (Electric Power Research Institute), Dick DeBlasio and Ben Kroposki (National Renewable Energy Laboratory), Mohammed Vaziri (Pacific Gas and Electric Company), Scott Lacy (Southern California Edison), and Narain Hingorani.

The team also recognizes the contributions of former team members and industry partners, including John Stevens (Sandia National Laboratory); Harry Vollkommer, Scott Casto, John Howard, Ron Zimmerly, Chase Liebold, and Dave Nichols (American Electric Power); Bob Panora, Jean Roy, and Joe Gehret (Tecogen); Jian Wen (Youtility); Paul Heavener (Princeton Power); Paul Wilhelm (Woodward); and Jonathan Lynch, Ed Linton, Hector Hurtado, and Kleber Facchini (Northern Power Systems).

All opinions, errors, and omissions remain the responsibility of the authors. All reference URLs were accurate as of the date of publication.

Table of Contents

Acknowledgments i
Table of Contents ii
Table of Figures iii
Acronyms and Abbreviations iv
1. Introduction and Purpose of this Report 1
2. The CERTS Microgrid Concept and Research Program 4
2.1 Elements of a Microgrid 4
2.2 The CERTS Microgrid Concept 7
2.3 The CERTS Microgrid Test-Bed Research Project 8
3. Test-Bed Demonstration of the CERTS Microgrid Concept 14
3.1 Overview of CERTS Autonomous Control Elements 14
3.2 Detailed Multi-unit Operating Characteristics with Test Results 24
3.3 Protection 33
4. Publications and Guide to Technical Reports 36
4.1 CERTS Microgrid Publications 36
4.2 CERTS Microgrid Test Bed Technical Reports 41
4.3 Tests Conducted, Linked to Technical Reports Prepared 42
4.4 CERTS Microgrid Test Bed Report Topics Cross Reference 46

Table of Figures

Figure 1. CERTS microgrid test bed aerial photo 10
Figure 2. One-line diagram of the CERTS microgrid test bed 10
Figure 3. Simplified diagram of the CERTS microgrid test bed showing meter and relay locations 11
Figure 4. Diagram of data acquisition system and energy management system data networks 12
Figure 5. Simplified one-line diagram of the CERTS microgrid test bed 12
Figure 6. A grid-forming voltage source 16
Figure 7. Phasor diagram 17
Figure 8. Unit Reactive Power vs. Voltage Droop 17
Figure 9.CERTS grid-forming voltage source controller 18
Figure 10. Voltage vs. reactive power droop example 19
Figure 11. Real Power vs. Frequency Droop Example 20
Figure 12. Power vs. frequency droop 21
Figure 13. P_{max}/P_{min} Example 23
Figure 14. Pmax Example: (a) real power (b) frequency commands 23
Figure 15. Example of islanding with three sources 26
Figure 16. A two-source microgrid 27
Figure 17. On-site test results from the AEP/CERTS microgrid test bed 28
Figure 18. Demonstration of under-frequency load shedding 29
Figure 19. Small signal stability boundary considering variation of Kppmax and XL 30
Figure 20. Response to a power-quality event 31
Figure 21. Lab test of seamless re-closing of grid interface switch 32
Figure 22. Current through grid interface switch during reclosing 33
Figure 23. High current from voltage source inverter 34

Acronyms and Abbreviations

AEP	American Electric Power
CEC	California Energy Commission
CERTS	Consortium for Electric Reliability Technology Solutions
CHP	combined heat and power
DAS	data acquisition system
DER	distributed energy resource(s)
DOE	United States Department of Energy
DSP	digital signal processor
EMS	energy management system
ESS	energy storage system
Hz	Hertz
IEEE	Institute of Electrical and Electronics Engineers
kVAR	kilovolts ampere reactive
kW	Kilowatt
LAN	local area network
LSF	load-shedding frequency
MW	Megawatt
PCC	point-of-common coupling
PLC	plant load controller
PV	Photovoltaic
V	volt(s)

1. Introduction and Purpose of this Report

Microgrids—interconnected sources of distributed energy resources (such as solar and wind power), energy storage, and electrical loads that can operate either independent of or connected to a surrounding electricity grid—have emerged as a promising means of increasing energy reliability and resiliency while reducing environmental impacts and lowering energy costs. Today, microgrids have emerged as a promising means of organizing and coordinating the deployment and operation of distributed energy resources (DER), such as combined heat and power (CHP), renewables such as photovoltaic (PV) and wind, energy storage systems, diesel generators, and controllable loads, either individually or in combination. Consumers are increasingly motivated to adopt DER in order to increase energy self-sufficiency, and increase energy reliability and resiliency, while lowering energy costs and reducing environmental impact.

The Consortium for Electric Reliability Technology Solutions (CERTS) was formed in 1999 to research, develop, and disseminate new methods, tools, and technologies to protect and enhance the reliability of the U.S. electric power system and the efficiency of competitive electricity markets. The founding members of CERTS include Lawrence Berkeley National Laboratory, Oak Ridge National Laboratory, Pacific Northwest National Laboratory, Sandia National Laboratories, the National Science Foundation Power Systems Engineering Research Center, and the Electric Power Group. See *certs.lbl.gov* for more information.

The Consortium for Electric Reliability Technology Solutions (CERTS) has made major contributions to the industry adoption of microgrids through the development of a set of advanced microgrid control and integration techniques, known collectively as the CERTS Microgrid Concept. The Concept has been validated via testing at a full-scale microgrid demonstration test bed operated by American Electric Power (AEP), the largest electric utility in the Midwestern United States. The test bed utilized both pre-commercial prototypes and commercial sources commissioned from industry-established vendors of distributed generation equipment. The CERTS Microgrid Concept is currently being used in the field at a major commercial demonstration site (the Santa Rita Jail in California, described further in Section 2.3) and is the standard product offered by a leading developer/manufacturer of distributed generation and CHP systems (Tecogen).

The CERTS Microgrid Concept, as described in detail in this report, represents an approach to controlling the electrical operation of the energy sources and loads within a microgrid while minimizing the need for communication among them. The objective of the CERTS Microgrid Concept is to establish and maintain the electrical requirements for safe, stable operation. This involves controlling both voltage and frequency, which is especially challenging when a microgrid is operated independent of the larger, surrounding electricity grid. Frequency and voltage control must be established solely by, and then coordinated amongst, the elements within the microgrid.

The CERTS Microgrid Concept gives the active elements within a microgrid (i.e., each energy source and controllable load) procedures that enable each element to operate in coordination with one another solely through information that is available locally (i.e., information limited to that which can be sensed/measured directly by each element). This design enables autonomous and decentralized control

of the microgrid.

The CERTS Microgrid Concept has three key advantages over traditional approaches to coordinating the operation of energy sources when they must function independent of the grid:

- First, the CERTS Microgrid Concept does not require explicit communications links for safe, stable operation of the microgrid. Operational decisions are made locally based on immediately available measured information and preprogrammed set points, increasing the robustness of the microgrid.
- Second, all sources act as peer voltage sources. No single source is designated as the 'lead', reducing the risk of microgrid collapse due to the loss of the designated master source, and thereby increasing the robustness of the system. Further with all sources acting as peer voltage sources, no complex mode changes are necessary when transitioning to or from the larger macro grid.
- Third, the separation and resynchronization to the larger grid is automatic, requiring no user intervention, and occurs in a seamless fashion. Utility interconnection requirements are also satisfied at the point(s)-of-common-coupling (PCC) instead of at each source location. This reduces utility compliance concerns and proof testing while reducing integration costs.

As a result of these innovations, autonomous control lowers the total cost of a microgrid compared to other designs because autonomous control greatly reduces the site-specific costs of commissioning and maintaining grid-independent operations. For smaller microgrids, which consist of individual sources ranging in size from tens to hundreds of kilowatts (kW) and totaling 5 to 20 megawatts (MW) in aggregate installed generating capacity, these costs are significant.[12] Therefore, lowering these costs greatly improves the economics of smaller-scale microgrids.

This report documents the key DER integration and control innovations that CERTS pioneered and demonstrated at the AEP test bed. The purpose of the report is to present these innovations within a single document so that others can better understand and learn from the project team's experiences and apply and build upon these innovations going forward. Toward this end, the report also contains extensive references to all CERTS publications, including all of the technical reports prepared at the test bed, with cross references to individual testing results.
This report is organized as follows:

In Section 2, we describe the CERTS microgrid research program. First, we summarize the elements that made up our test bed microgrid. Then, we outline, in general terms, the key DER control and integration approaches that form the basis of the CERTS Microgrid Concept. This section concludes by describing the sequential, multi-stage research program that we pursued to demonstrate this approach using full-scale,

[1] J. Giraldez, F. Flores, S. MacAlpine and P. Asmus. 2018. *Microgrid Cost Study Phase I: Data Collection and Analysis of Microgrid Costs in the U.S.* NREL TP-5D00-67821. (Forthcoming.)
[2] New York State Energy Research and Development Authority (NYSERDA). 2014. *Microgrids for Critical Facility Resiliency in New York State.* http://nyssmartgrid.com/wp-content/uploads/Microgrids-for-Critical-Facility-NYS.pdf

pre-commercial prototypes and commercial units at the CERTS/AEP test bed. This section is written for a general audience; it does not assume that readers have in-depth technical knowledge of electric power systems.

In Section 3, we describe in greater technical detail the key CERTS DER control and integration approaches that are outlined in Section 2. We first describe the major elements of the autonomous control approach that is at the heart of the CERTS Microgrid Concept. We then describe technical elements of the approach that are specific to individual unit controls and to coordination among multiple units. Throughout, we illustrate the concepts with test results from the CERTS/AEP test bed. A final subsection describes protection issues. This section is written for a technical audience and assumes in-depth knowledge of the requirements for stable operation of an electric power system.

In Section 4, we list the publications and test bed technical reports prepared over the course of the project. Cross-references are provided that link each of the tests conducted to the technical reports in which the test results can be found.

Commercialization of the CERTS Microgrid Concept

The CERTS Microgrid Concept innovations demonstrated at the AEP Test Bed have been commercialized in the Tecogen InVerde natural gas combined heat and power (CHP) product line. The real-world resilience benefits of the CERTS Microgrid Concept have been documented at **The Brevoort Co-op**, a 1950s-era luxury co-op tower in Greenwich Village, New York was able to maintain power, water, and heat during widespread blackouts caused by Hurricane Sandy in October 2012 through its microgrid system. Featuring four CHP units (a total of 400 kW), the system—complete with CERTS algorithms, inverter controls, and automatic transfer switch built in—was able to seamlessly disconnect from the grid during the disruption and reconnect to the grid once power was restored. While most of Manhattan was without power, the Brevoort—home to about 720 people—was able to maintain power throughout the entire five-day disruption. For more information, see https://www.tecogen.com/news-events/press-releases/detail/163/grid-independent-cogen-system-from-tecogen-comes-through.

The Brevoort's Tecogen InVerde System

2. The CERTS Microgrid Concept and Research Program

This section describes the CERTS microgrid research program. We first describe the elements that make up a microgrid. We then outline the advanced DER control and integration approaches that make up the CERTS Microgrid Concept, each of which is described in greater technical detail in Section 3. We conclude by describing the sequential, multi-stage research project we pursued to demonstrate the CERTS Microgrid Concept using full-scale, pre-commercial prototypes at the CERTS/AEP test bed. This section is written for a general audience; it does not assume that readers have in-depth technical knowledge of electric power systems.

2.1 Elements of a Microgrid

A microgrid consists of energy sources and loads that, together, can operate independent of as well as connected to a surrounding, larger electricity grid. This subsection briefly introduces these elements and the physical interconnections that link them to one another electrically. The purpose of this discussion is to introduce terminology and describe the microgrid components that form the basis for, or establish the requirements that must be addressed by, the CERTS Microgrid Concept.

2.1.1 Sources

Equipment that supplies electricity to the microgrid is referred to as a *source*. Traditionally, sources have been primarily fossil-fueled, internal combustion engine-generators. More recently, fossil-fueled sources include turbine-generators and fuel cells that are installed as stand-alone sources to produce only electricity (e.g., as back-up generators) or along with heat-recovery equipment in combined heat and power (CHP) or cogeneration systems. Renewable generators, both wind-driven and solar PV, are relatively newer sources. Energy storage is also considered a source for our purposes.

In relation to microgrid control strategies, we can group sources into two main categories based on how they couple to or interface with the electrical system:

1. **Directly Coupled Machine Sources.** These are traditional sources, such as synchronous generators driven by a prime mover such as an engine. Electrical and mechanical operation are tightly linked in these sources. This linkage limits the speed at which these sources can respond to rapidly changing grid conditions; the response time of these sources must be accounted for explicitly in microgrid control strategies.
2. **Inverter-Coupled Sources.** Inverters are commonly found in solar, wind, energy storage, and other generators (e.g., asynchronous engine and turbine generators). A basic inverter consists of semiconductor switches, an electrical power filter, and an intelligent controller. Inverters can adjust the voltage and current waveforms they deliver as an electrical source. In principle, this allows inverters to respond more quickly and flexibly than directly coupled sources.

The CERTS microgrid research program focused on new methods for coordinating the operation of both directly coupled and inverter-coupled sources, taking explicitly into account the differences in the

speed and flexibility of each source's responses. These differences and how we addressed them are outlined briefly in Section 2.2 and discussed in greater detail in Section 3.

2.1.2 Loads

Equipment that consumes electricity within a microgrid is referred to as *load*. Loads can be subdivided into broad categories such as lighting, electronics, and motors. Within a microgrid a vital control task is to manage the voltage and frequency when the demands placed on the energy sources within the microgrid change as loads are switched on and off. This can be especially challenging when there are large differences between the local load consumption and the local energy production. An example is when the microgrid is importing a significant amount of power from the surrounding grid and an interruption takes place on that grid. In this situation, the microgrid must separate (or "island") itself from the surrounding grid and near instantly increase generation from available sources within the microgrid to make up for the shortfall created by the loss of power from the larger grid. A related challenge arises when a large induction motor is turned on within the microgrid, and the instantaneous in-rush of current required to start the motor places a similar, immediate demand on the available sources of energy within the microgrid. If the available microgrid sources do not increase their output fast enough, the microgrid can collapse. Additionally, if sources become overloaded for an extended period of time, they may need to shut down for self-protection—further exacerbating the imbalance between load and generation.

The CERTS Microgrid Concept is comprehensive, relying on both responsive energy sources and load management strategies to address these imbalances. As described in detail in Section 3, managing the response of energy sources was a major focus of the CERTS research program. Here, we simply outline the basic principles of the CERTS load-management approach.

The first element of the CERTS microgrid load-management concept is placement of loads based on their criticality. To the extent feasible, a microgrid constructed according to the CERTS Microgrid Concept separates critical and non-critical loads electrically on separate feeders. This allows non-critical loads to be shed automatically as a group when electricity supply from the surrounding grid is interrupted and microgrid supply and demand must be rebalanced rapidly.

The second element of the CERTS microgrid load-management concept is under-frequency load shedding of prioritized loads that remain after non-critical loads have been removed. Insufficient generation available to meet microgrid loads causes the system frequency to fall. Load shedding is triggered when the microgrid system frequency falls below a pre-determined threshold value, which works toward restoring the balance between supply and demand.

2.1.3 Switchgear and Supporting Equipment

Switchgear within a microgrid functions as the control points on the paths over which electrical energy flows from sources to loads. Switchgear systems help to ensure overall system reliability by quickly isolating faults. Many microgrids have a switchgear component called a grid interface switch that is

located at a strategic point where the microgrid connects to the larger macro grid. Switchgear is commonly constructed of circuit breakers, protection relays, and measurement systems that provide information and control to higher-level control systems. As with sources and loads, switchgear has many variations. The CERTS microgrid research project studied two types of switchgear:

1. **Advanced distribution switchgear** consists of power circuit breakers and a protection relays. The protection relay intelligently monitors power flow and controls the power circuit breaker. The protection relay enables the system to be dynamic, adjusting to the present conditions, sources, and status of other equipment surrounding it. The combination of a power circuit breaker and protection relay can provide both traditional protection when the microgrid is interconnected to the larger macro grid and more sensitive protection when the microgrid is operated as an island separate from the macro grid. These switching points can also be used for load shedding when necessary to prevent a microgrid from collapsing.
2. A **grid interface switch** is usually composed of a power breaker and protection relay similar to standard protection switchgear; alternatively, it can contain a semiconductor switch in place of the power breaker, which enables a faster transition from connected to the microgrid to islanded and back again. The protection relay performs a set of functions referred to as grid interface protection. This amounts to a set of rules for disconnecting and reconnecting the microgrid to the larger macro grid based on observations of the voltage and current. The grid interface switch also acts as the utility compliance point, ensuring that the microgrid operates within the boundaries of the utility interconnection agreement.

Another broad category of equipment within a microgrid encompasses communications, metering, energy management, and other services that allow interaction among sources and loads within the microgrid as well as measurement, analysis, and optimization of microgrid performance.

The objective of DER control in the CERTS Microgrid Concept is autonomous frequency and voltage control, with the time scale for control actions measured in electrical cycles and seconds. This is distinct from other, slower control objectives, such as dispatching DER to minimize system operating costs, maximize revenues from off-system sales of electricity, or to meet environmental emissions requirements. These other types of control actions operate on a time scale measured in minutes and hours. Lawrence Berkeley National Laboratory's Distributed Energy Resources Customer Adoption Model (DER-CAM) is an example of an approach for optimizing these control objectives (see text box).

The **Distributed Energy Resources Customer Adoption Model** (DER-CAM) is a powerful, comprehensive decision-support tool primarily for finding optimal DER investments for buildings, facilities or multiple microgrids.

This widely accepted, extensively peer-reviewed model has been under development at Lawrence Berkeley National Laboratory since 2000 and can be used to find the optimal **portfolio**, **sizing**, **placement**, and **dispatch** of a wide range of DER while optimizing multiple stacked value streams that include **load shifting**, **peak shaving**, **power export** agreements, and participation in **ancillary service markets**.

See *building-microgrid.lbl.gov/projects/der-cam* for more information.

2.2 The CERTS Microgrid Concept

This subsection outlines the key features and characteristics of the CERTS Microgrid Concept, which is an approach to coordinating the electrical operation of energy sources and loads within a microgrid. The overall objective of the approach is to establish and maintain the electrical requirements for safe, stable operation; this involves controlling both voltage and frequency. We clarify the relationship between voltage and frequency control that is necessary for stable operation of a stand-alone electric power system. Foundational references documenting the development and evolution of the CERTS Microgrid Concept are Lasseter (1998),[3] Lasseter et al. (2003),[4] and Lasseter & Piagi (2004).[5]

When a microgrid is connected to the larger macro grid, the macro grid acts as a buffer, supplying unbalanced power requirements, supporting the voltage magnitude, and regulating the frequency. Upon separation from the macro grid, managing these requirements for stable operation becomes the sole responsibility of the sources within the microgrid. It can be challenging to deliver the same level of power quality solely from this comparatively much smaller number and size of sources. To do so, their operations must be carefully coordinated with one another.

The key to the CERTS Microgrid Concept is application of a specialized form of autonomous, decentralized control. Microgrid sources and controllable loads employ a technique that enables each to operate in coordination solely through information that is locally measured directly by each microgrid element.

The key features and characteristics of the CERTS Microgrid Concept are:

1. Reliance on energy sources that are grid-forming voltage sources, which allows flexibility in serving loads and avoids the need to when the microgrid transitions from grid-connected to grid-independent operation.
2. Use of droop-control techniques, which allow adjustment of real and reactive power output based solely on information that can be measured at the power terminals of each unit. This simplifies the integration of a CERTS component within a microgrid.
3. Use of individual, local controls that allow each unit to "plug and play" without extensive, site-specific re-engineering and tuning to ensure (and maintain) coordination among multiple energy sources within the microgrid.
4. Avoidance of master-slave relationships in which one source leads and others follow. This enhances overall robustness as the sources do not depend on the availability of a critical lead unit. Further, it reduces the complexity of individual microgrid controls as only the 'peer' case

[3] Lasseter, Robert H. 1998. "Control of Distributed Resources." In *Bulk Power System Dynamics and Control IV*. https://certs.lbl.gov/publications/control-distributed-resources.
[4] Lasseter, Robert H., Abbas A. Akhil, Chris Marnay, John Stephens, Jeffery E. Dagle, Ross T. Guttromson, Sakis A. Meliopoulous, Robert J. Yinger, and Joseph H. Eto. 2003. *Integration of Distributed Energy Resources: The CERTS MicroGrid Concept*. https://certs.lbl.gov/publications/integration-distributed-energy.
[5] Lasseter, Robert H., and Paolo Piagi. 2004. "Microgrid: A Conceptual Solution." In *IEEE Power Electronics Specialists Conference*, DOI: 10.1109/PESC.2004.1354758.

exists instead of both 'leader' and 'follower' cases.

5. Flexibility in communication latency and speed between sources and an optional central controller. The CERTS Microgrid Concept can use less expensive, lower-bandwidth, slower forms of communications for DER dispatch and optimization. Use of independent controls also allows the CERTS components to be distributed physically over the microgrid geography instead of requiring a centralized location. This can enable secondary benefits such as a reduced thermal transport distance for a CHP source and reduced electrical losses, and thus improved overall efficiency, by placing sources closer to loads.
6. Locating of essential functions within each DER allows each device to maintain its own specific operational needs, reducing the reliance on a central controller and its complexity necessary. This allows reuse without redesign from project to project reducing overall costs.
7. The mixing and matching of individual types of DER and optimizing controls across different types and vendors for the best overall microgrid performance from one consumer to the next.

2.3 The CERTS Microgrid Test-Bed Research Project

The CERTS Microgrid Concept was field tested through a multi-year, multi-party collaboration to develop, test, and demonstrate a full-scale microgrid at a utility-hosted site. The test bed construction began in 2006 and was actively used for testing from 2006 to 2017. This subsection summarizes the research approach, describes the test bed, and outlines the sequence of testing.

2.3.1 Research Approach

The goals of the CERTS microgrid test-bed research were to elicit utility acceptance of the advanced DER integration and control approaches that constitute the CERTS Microgrid Concept and to facilitate vendor adoption of this concept. We pursued these goals by (1) partnering with an electric utility, American Electric Power (AEP), to host a test bed; (2) commissioning both pre-commercial prototypes and commercial units from established industry vendors of distributed generation equipment; (3) carrying out a staged sequence of research and demonstrations; and (4) publishing and presenting extensively on project findings.

AEP was a key strategic partner in our research. Because AEP is a large electric utility with a footprint in many Midwestern states, AEP staff were familiar with a wide variety of distribution system planning and operating practices. Perhaps more importantly, AEP has an established reputation as a leader in groundbreaking electricity research and development. During the 1970s, AEP-led research formed the basis for the design and construction of the highest-voltage alternating current transmission lines in North America. As a result, AEP's hosting of the test bed provided assurance that accepted utility testing and demonstration practices would be strictly observed.

Commissioning of both pre-commercial prototypes and commercial units for the project was important for facilitating commercial adoption of successfully demonstrated innovations. Significant effort was expended discussing the CERTS Microgrid Concept with potential vendors to ensure compatibility with

their current or planned product lines. The objective of this aspect of the overall project was to increase the likelihood that successful demonstration at the test bed would lead to licensing CERTS-created intellectual property for subsequent commercial offerings. To date, Tecogen has licensed CERTS algorithms for their InVerde 100 engine-generator, and Princeton Power Systems (PPS) is currently using CERTS-compatible techniques on multiple energy storage product lines.

The research process was staged to ensure checks and balances leading up to and including demonstration at the test bed. First, the theoretical insights underlying the CERTS Microgrid Concept were developed and refined through university-led research activities. These activities included extensive simulation studies followed by testing of bench-scale laboratory mock-ups and prototypes. The findings were shared with vendors and were the basis for the benchmark performance requirements for both factory testing of pre-commercial prototypes and field commissioning of the prototypes at the test bed. Once commissioned, individual prototypes were subjected to a stand-alone (or single-unit) performance testing followed by multi-unit testing. Initially, the prototypes were all produced by a single vendor. Later, prototypes from different vendors were tested jointly.

Field Demonstration

The microgrid at the **Santa Rita Jail** in Alameda County, California, was an early field demonstration of the CERTS Microgrid Concept. The self-contained power system consists of a 1.2 MW rooftop solar array, five wind turbines generating 11.2 kW, a 1.0 MW fuel cell, and 2.0 MW of battery storage. This system is controlled by CERTS technology embedded in the battery and switch power electronics, allowing the facility to island and reconnect at will. If the surrounding electricity grid is interrupted due to a storm, earthquake, or other disaster, the jail can operate autonomously until local utility power is restored—a critical feature for a facility where any disruption in power can have serious security concerns. For more information, see http://www.energy.ca.gov/tour/santarita/.

A Portion of the Santa Rita Jail Microgrid System

2.3.2 CERTS/AEP Microgrid Test Bed

The CERTS/AEP test bed is located near Columbus, Ohio. The test bed operates at 480/277 volts (V) (i.e., three-phase, four-wire) and consisted initially of three Tecogen generators at 480 V capable of producing 60kW plus 60 kilovolts ampere reactive (kVAr) (Gen-set A1, Gen-set A2, and Gen-set B1), and four load banks (Load Bank 3, Load Bank 4, Load Bank 5, and Load Bank 6) capable of consuming 100kW plus 20kVAr each, as shown in Figure 1. Each of the generators is connected to a 112-kV isolation transformer and interfaces with the microgrid by means of an inverter, developed by The Switch, in which the CERTS microgrid control algorithms are embedded. A semiconductor switch made by S&C Electric Company, initially called the static switch, and later renamed as the grid interface switch, connects the microgrid to the AEP utility grid. Load Banks 3 through 5 are the local loads in zones located beyond the grid interface switch, and Load Bank 6 is a customer load in Zone 6, located on the utility side of the grid interface switch.

The test bed contains six zones. Zones 2 through 6 are within the CERTS microgrid, and Zone 1 is the

utility interface, referred to as the point of common coupling (PCC) to the grid). Each zone is protected by a Schweitzer SEL-351 relay. Faults of varying magnitude can be applied to (and removed from) each zone through an additional breaker. See Figure 2 for a visual depiction of the test-bed site and Figure 1 for a diagram showing the test-bed design.

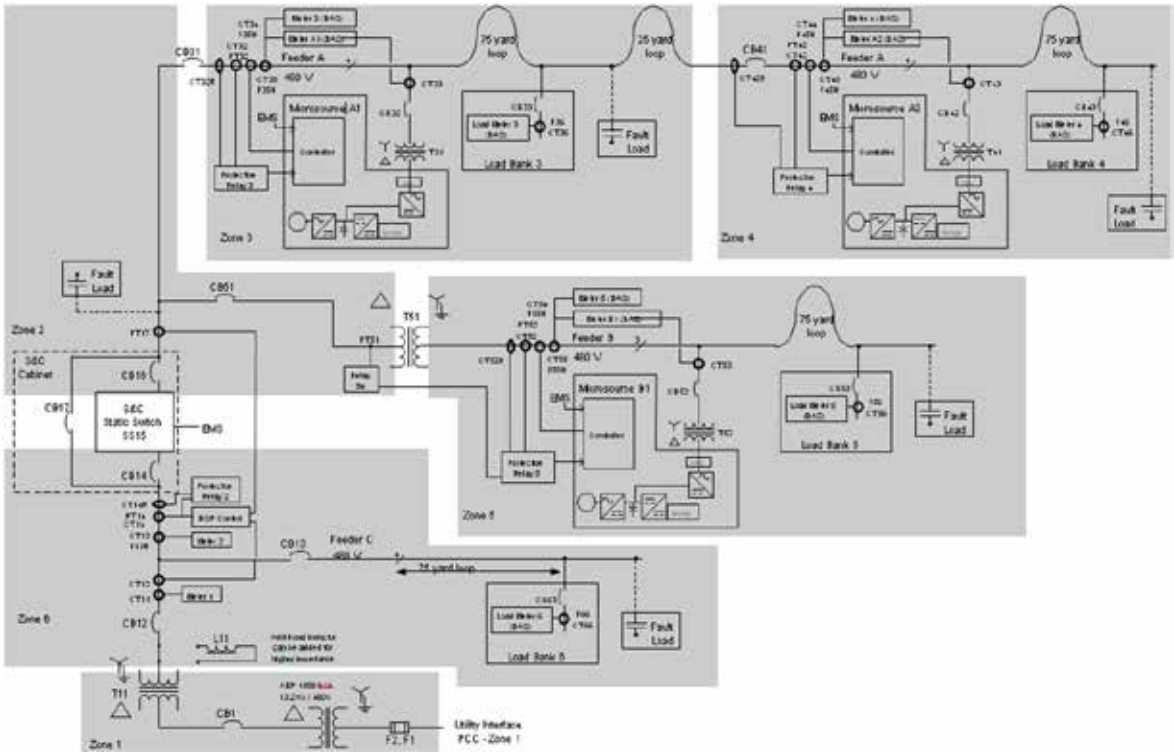

Figure 1. One-line diagram of the CERTS microgrid test bed

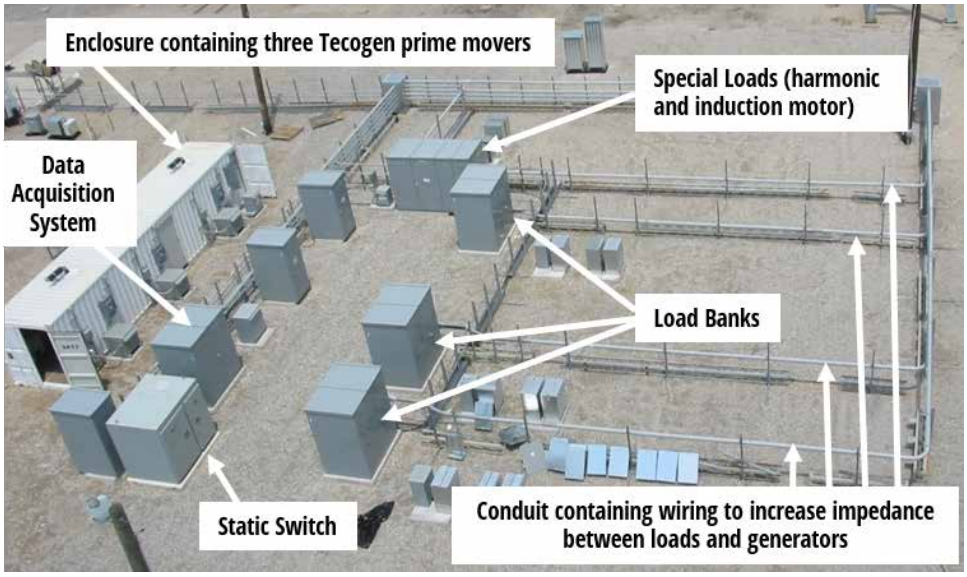

Figure 2. CERTS microgrid test bed aerial photo

As shown in Figure 3, 12 PML ION 7650 meters are placed throughout the microgrid. These meters monitor electrical system conditions, acquire phase current and voltage waveforms, and calculate root mean square (RMS) values of voltage, current, active power, reactive power, and frequency.

An Ethernet network of fiber optic links and switches (shown in Figure 4) communicates among all meters, load control (plant load controllers [PLCs]), and the data acquisition system (DAS) computer. The DAS and energy management system (EMS) computers are networked into the Dolan local area network (LAN) and to a secure website with user ID and password protection. Additional serial links, using fiber optic converters, connect all relays, the grid interface switch digital signal processor (DSP) controller, and the Tecogen gen-set controls to the EMS computer.

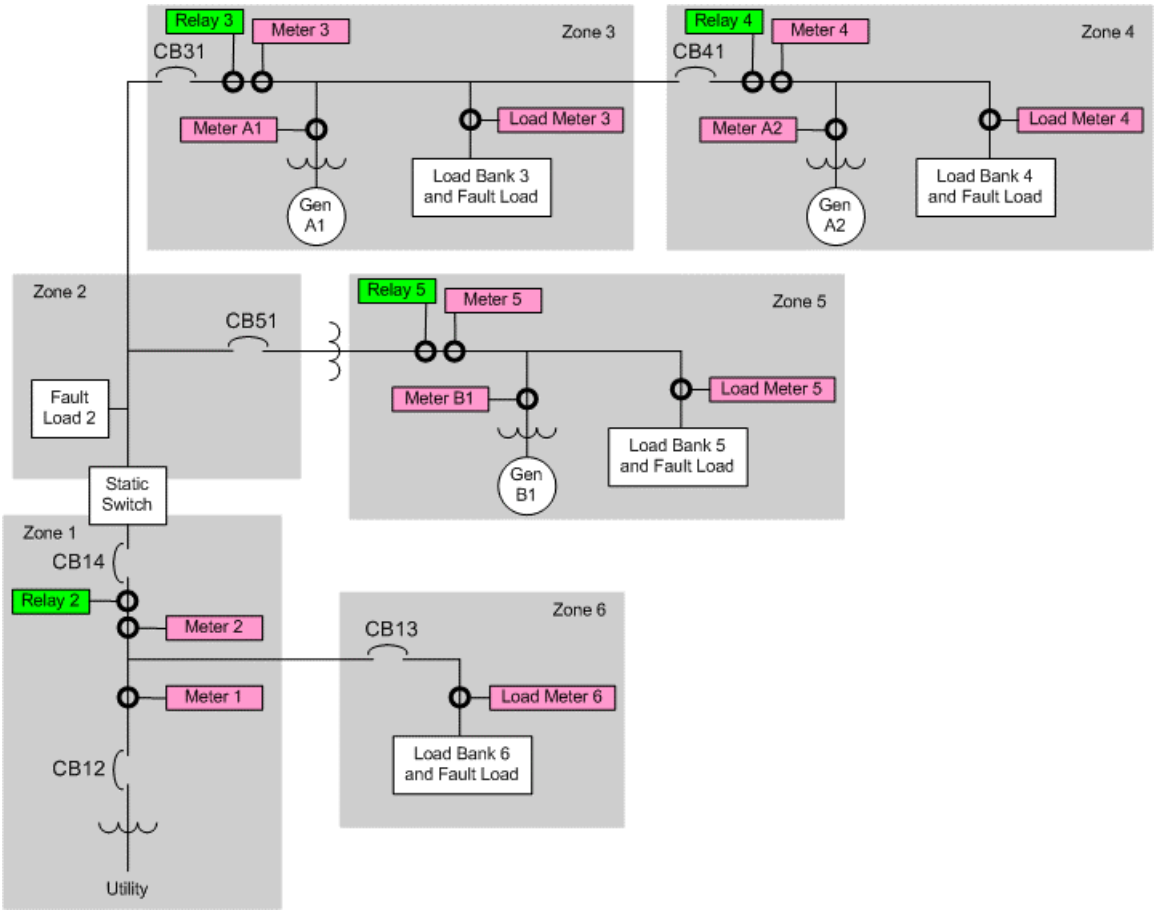

Figure 3. Simplified diagram of the CERTS microgrid test bed showing meter and relay locations

As described below, in subsequent phases of the project, the test bed was modified to incorporate new equipment. Figure 5 shows a simplified one-line diagram of the final, modified configuration of the test bed.

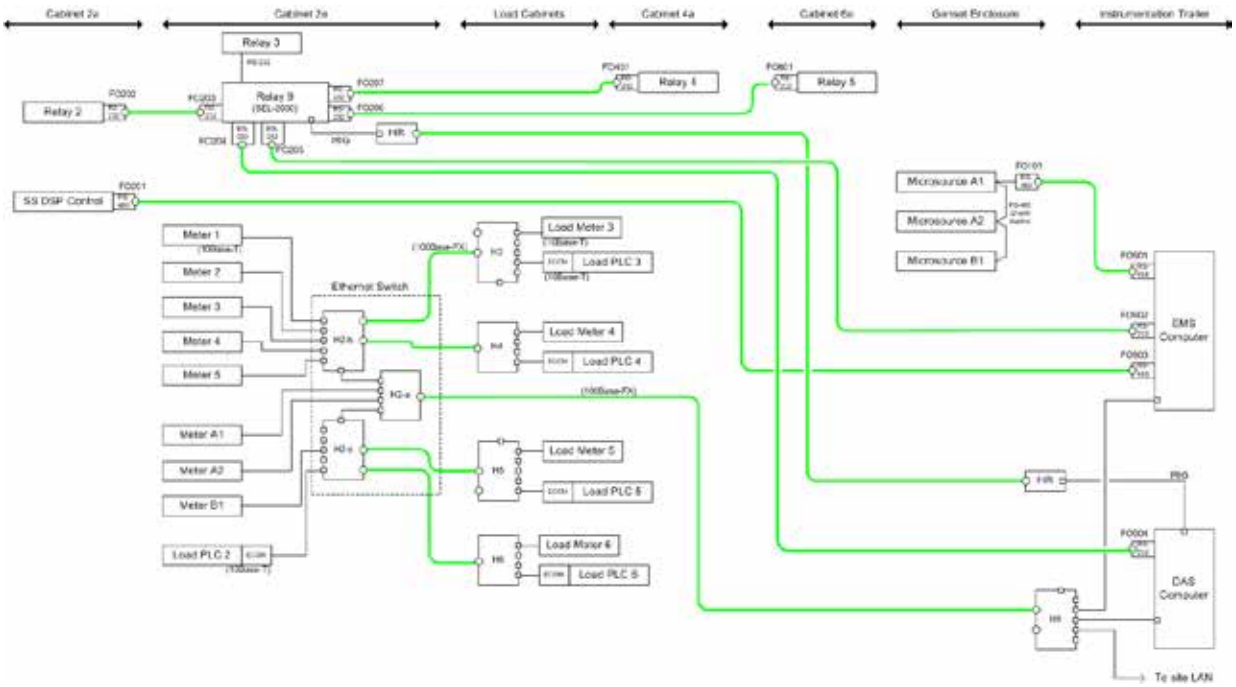

Figure 4. Diagram of data acquisition system and energy management system data networks

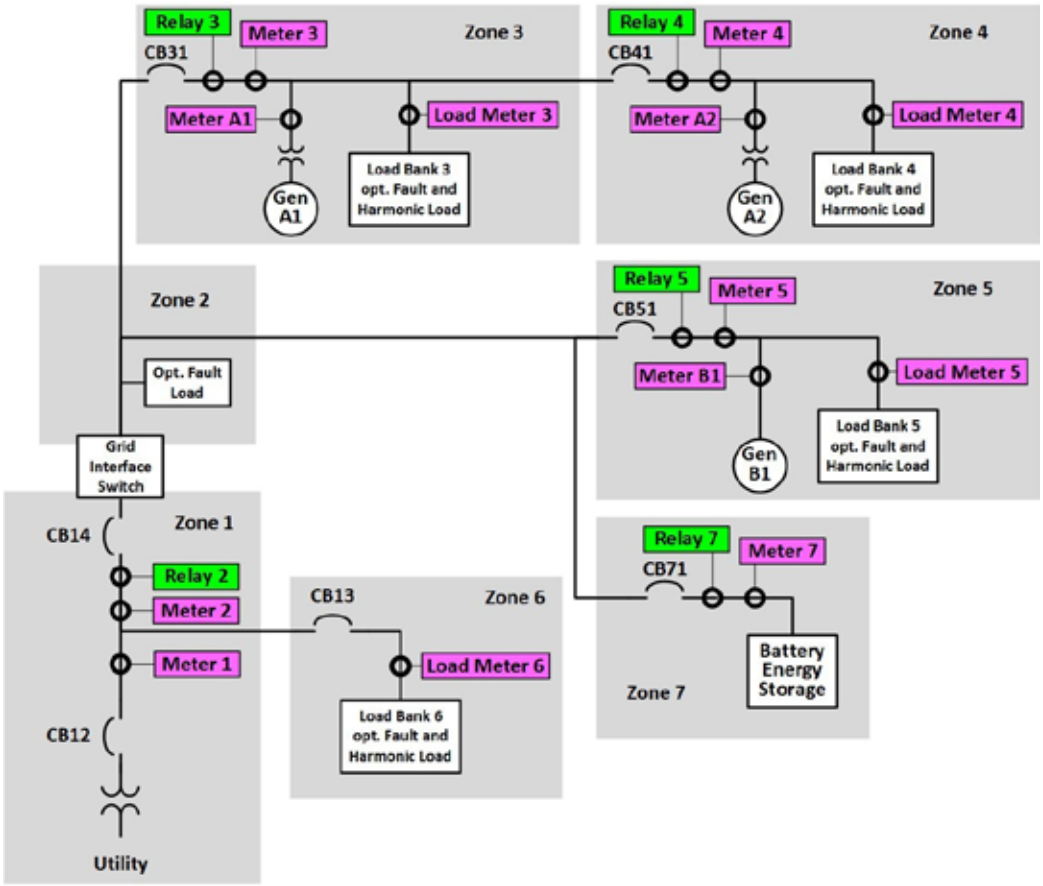

Figure 5. Simplified one-line diagram of the CERTS microgrid test bed

2.3.3 Overview of Testing Phases at the CERTS/AEP Test Bed

Phase 1 of the CERTS microgrid test bed research entailed four activities: (1) selection of a test-bed host, (2) design and construction of the initial test bed configuration, (3) initial testing of three Tecogen engine-generator prototypes, and (4) testing of a grid interface switch. Test results and supporting publications for the first phase of the project can be found at certs.lbl.gov/project/certs-microgrid-test-bed-phase-i.

Phase II of the CERTS microgrid test-bed project developed, and, as appropriate, demonstrated at bench scale the technologies for optimizing the microgrids to enhance the business case for them. The technologies that were studied aimed to: (1) reduce protection costs, (2) reduce direct current storage costs, (3) add alternating current storage, and (4) incorporate non-inverter-based sources. Test results and supporting publications prepared for the second phase of the project can be found at certs.lbl.gov/project/certs-microgrid-test-bed-phase-ii.

Phase III of the CERTS microgrid test-bed project tested four major new hardware elements: (1) a flexible EMS for dispatch, (2) a CERTS-compatible conventional synchronous generator, (3) intelligent load shedding, and (4) a commercially available stand-alone electricity storage device with CERTS controls. Test results and supporting publications prepared for the third phase of the project can be found at certs.lbl.gov/project/certs-microgrid-test-bed-phase-iii.

The key references documenting the development of the CERTS/AEP microgrid test bed and the testing conducted there are Eto et al. (2009)[6] and CERTS (2010).[7]

[6] Eto, J.H., R.H. Lasseter, B. Shenkman, J. Stevens, H.T. Volkommer, D. Klapp, E. Linton, H. Hurtado, J. Roy, and N.J. Lewis. 2009. *CERTS Microgrid Laboratory Test Bed: California Energy Commission Public Interest Research (PIER) Program Final Report.* https://certs.lbl.gov/publications/certs-microgrid-laboratory-test-bed.

[7] Consortium for Electric Reliability Technology Solutions (CERTS). 2010. C*ERTS Microgrid Phase Two Test Report.* https://certs.lbl.gov/publications/certs-microgrid-phase-two-test-report.

3. Test-Bed Demonstration of the CERTS Microgrid Concept

This section describes the technical details of the key DER control and integration approaches that form the CERTS Microgrid Concept. We first describe the major elements of the autonomous control approach that is at the heart of our concept (section 3.1). We then illustrate aspects of these descriptions with selected results from the test bed (section 3.2). In a final subsection we describe microgrid protection issues (section 3.3). This section is written for a technical audience and presumes in-depth knowledge of the requirements for stable operation of an electric power system.

3.1 Overview of CERTS Autonomous Control Elements

The five core elements of the CERTS autonomous control approach are:

- The DERs are grid-forming voltage source devices with the ability to control voltage and frequency (see Section 3.1.1).
- Voltage is controlled locally and ensures local stability without circulating reactive power (see Section 3.1.2).
- During islanded operation, the autonomous sources actively share loads and regulate frequency (see Section 3.1.3).
- The autonomous sources protect themselves from overload while maximizing their useable operating range (see Section 3.1.4).
- Clusters of sources and loads within the microgrid transition together between grid-connected and islanded operation. A grid interface switch autonomously disconnects the microgrid from the macro grid under conditions such as faults, power-quality events, or events such as those described in Institute of Electrical and Electronics Engineers (IEEE) Standard 1547. Once the macro grid event that triggered the microgrid's disconnection is resolved, the microgrid reconnects to the macro grid autonomously. (See Section 3.1.5).

3.1.1 Individual Controls within each Source

In the CERTS Microgrid Concept, each microgrid source has a basic set of controls that allows the source to remain stable during both steady-state and transient electrical events. This is important for maintaining low-level stability inherent to each device and for avoiding the need for a master-level controller to serve this function. The basic controls are simple droop controls for frequency and voltage and a limiter function at the edges of the operating envelope. This style of control, commonly used by synchronous generators for decades, was adapted to work with inverter-based sources. Local autonomy allows each source to operate as a voltage source and to adjust its output characteristics as necessary to accommodate the requirements of the electrical bus at any given time.

3.1.2 Grid-following Current Source and Grid-forming Voltage Source Inverters

There are a number of techniques used to control the interface between DER sources behind an inverter and the grid. Grid-following current source control and grid-forming voltage source control are two common examples. The CERTS Microgrid Concept entails operating each source as a grid-forming voltage source device. This may seem like a simple idea, but, historically, most inverter-based sources (such as PV and wind) have been designed to operate as grid-following current-source devices.

In current source control devices the output current magnitude and phase angle are adjusted relative to the system, the voltage is then dependent on the impedance of the load. Current source control is sometimes called "grid following" because it depends on another voltage source, commonly the utility macro grid, to provide system voltage and frequency regulation. Grid-following sources can easily control real and reactive power as well as their fault current contributions. However, a grid-following current source cannot easily regulate system voltage and frequency. They behave more like a negative load than a traditional source.

Alternatively, in voltage source control the voltage magnitude and frequency are adjusted relative to the system and the current is dependent on the impedance of the load. Voltage source control is sometimes called "grid-forming" because they are capable of regulating voltage and frequency in a fashion similar to traditional sources in the macro grid. During contingencies, grid-forming voltage sources will increase or decrease their output power near instantaneously to balance loads and maintain local voltage and frequency.

3.1.3 Paralleling Grid-forming Voltage Sources

In all power systems, at least one source must act as a voltage source device to maintain and regulate the voltage delivered to end loads. However, care must be taken when multiple voltage sources are interconnected on the same electrical bus. This is because each voltage source is seeking to control the same variable—in this case voltage. In addition, when these sources are interconnected on a low-voltage electrical bus, they commonly have a low-impedance connection between them. Therefore, even a small difference in voltage at each source can lead to a significant current flow between sources. To manage and reduce this current, the CERTS Microgrid Concept relies on two components of each source: the source's internal impedance and a droop controller.

A grid-forming voltage source is intrinsically an ideal voltage source. It regulates both output voltage, V, and frequency of the source behind a coupling reactance, X_L, as shown in Figure 6.

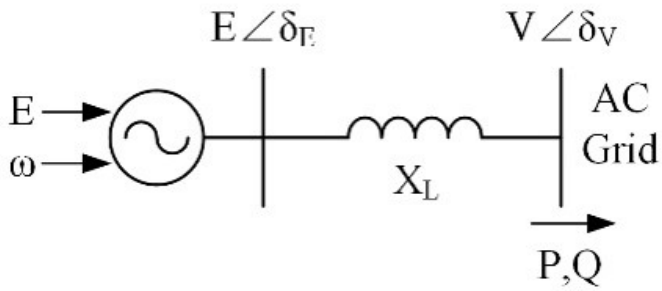

Figure 6. A grid-forming voltage source

$$d_p = d_E - d_V \tag{1}$$

$$P = \frac{EV}{X_L}\sin d_p \approx \frac{EV}{X_L} d_p \tag{2}$$

$$Q = \frac{E^2 - EV\cos d_p}{X_L} \approx \frac{E(E - V)}{X_L} \tag{3}$$

The coupling reactance, X_L, plays a critical role in decoupling the interactions between real power (P) and reactive power (Q) as well as in ensuring microgrid stability. For X_L between 0.03 and 0.05 pu. P is approximately linear with phase angle δp, and Q is approximately linear with voltage magnitude E, (equations 1–3, above). If X_L is too large, P and Q will interact undesirably. If X_L is too small, the source voltage can be unstable.

Integration of large numbers of grid-forming voltage sources is very challenging when using only basic unity power factor control. An improvement is to use voltage regulation for plug-and-play functionality of these sources. To understand the importance of local voltage control, consider a voltage source, E, connected to the grid with a fixed voltage, V. There will be a voltage difference ($\overline{\Delta \boldsymbol{V}} = \bar{\boldsymbol{I}}\,\boldsymbol{Z}$) between the grid and the grid-forming source based on the coupling impedance and current flowing between the voltage sources. This voltage difference is not fixed and will change with load. Without local voltage control, systems with multiple sources could experience undesirable current flows between them. Small errors in voltage set points can result in excessive circulating current that can exceed the ratings of the sources.

Fundamental to addressing the issue of circulating current flow is establishing a means for or approach to modifying the voltage E within the grid-forming voltage source so as to minimize (or control) this reactive current flow between the source and the microgrid. The basic physics illustrated in the phasor diagram in Figure 7 show that if the inverter was operating at E' instead E, there would be no reactive power flow. If we hold real power, P, constant, the phase angle, d, will increase while magnitude E is reduced to E'. Figure 7 also indicates that the source can control reactive power output Q through its voltage, E, while holding real power P fixed.

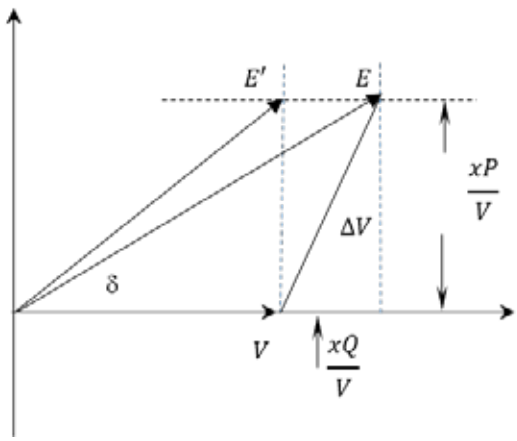

$$\Delta V = E - V = ZI = jxI \quad (for\ R = 0)$$

$$I = \frac{P - jQ}{V}$$

$$\Delta V = \frac{xQ}{V} + j\frac{xP}{V}$$

E: inverter voltage, V: microgrid voltage and x-coupling inductance

Figure 7. Phasor diagram

Figure 7 also shows that if the magnitude of the microgrid voltage, V, and the source voltage, E, are the same, then the reactive power, Q, is not zero for any power flow between the two sources. This is key for implementing a dynamic voltage controller based on the concept of droop. Figure 8 shows the reactive power vs. voltage droop controller. As the reactive power, Q, generated by the unit becomes more capacitive, the local voltage set point is reduced. Conversely, as Q becomes more inductive, the voltage set point is increased. Reliance on this form of droop control is key to plug-and-play features and scalability. Multiple grid-forming sources can be added to the system without communication if the voltage at each source has a reactive power vs. voltage droop function.

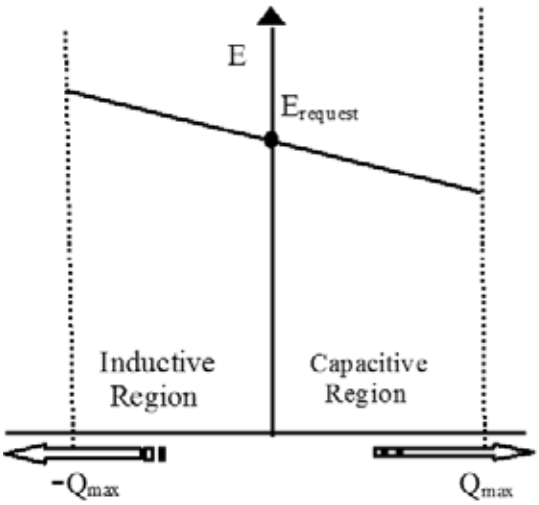

Figure 8. Unit Reactive Power vs. Voltage Droop

3.1.4 Droop Control

In the CERTS Microgrid Concept, the control at each source has three major functions:

1. To regulate the voltage at the interface point,
2. To provide for a power vs. frequency droop, and
3. To enforce power limits.

Figure 9 shows the details of the basic controller. The control measures the currents injected by the inverter, Ia, Ib, and Ic, and the line-to-line voltages at the interface point. These measurements allow calculation of instantaneous real and reactive power and voltage magnitude. Set points are Voltage Request, $E_{request}$ and Real Power Dispatch, $P_{dispatched}$. The controller uses both a real power vs. frequency droop characteristic and a reactive power vs. voltage droop characteristic.

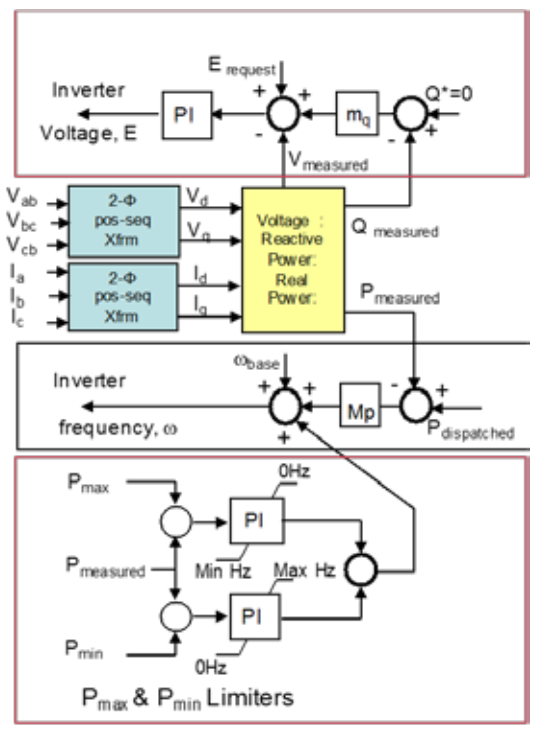

Figure 9.CERTS grid-forming voltage source controller

3.1.5 Voltage control

The voltage control stabilizes local voltage by adjusting the inverter's output voltage magnitude, E. The voltage control is shown at the top of Figure 9. The reactive power vs. voltage droop function has two dispatchable quantities—voltage, $E_{request}$, and reactive power dispatch, Q*,—and two measured quantities—reactive power output, $Q_{measured}$, and actual voltage, $V_{measured}$.

As an example, in Figure 10 we show a single isolated source with rated real and reactive power of 100kW and ±100 kVAR respectively. The dispatched voltage, $V_{request}$, is the desired output voltage that

the unit will deliver at the dispatched Q*, in this case 0 kVAR. The microgrid bus has an expected range of voltage between V-max and V-min. This range, along with the sources rated kVA, determines the slope of the Q vs. V droop control. In this example the voltage has a range of 277 ±13.9V or 5% droop or an m_q (or slope) of 0.139V/kVAR.

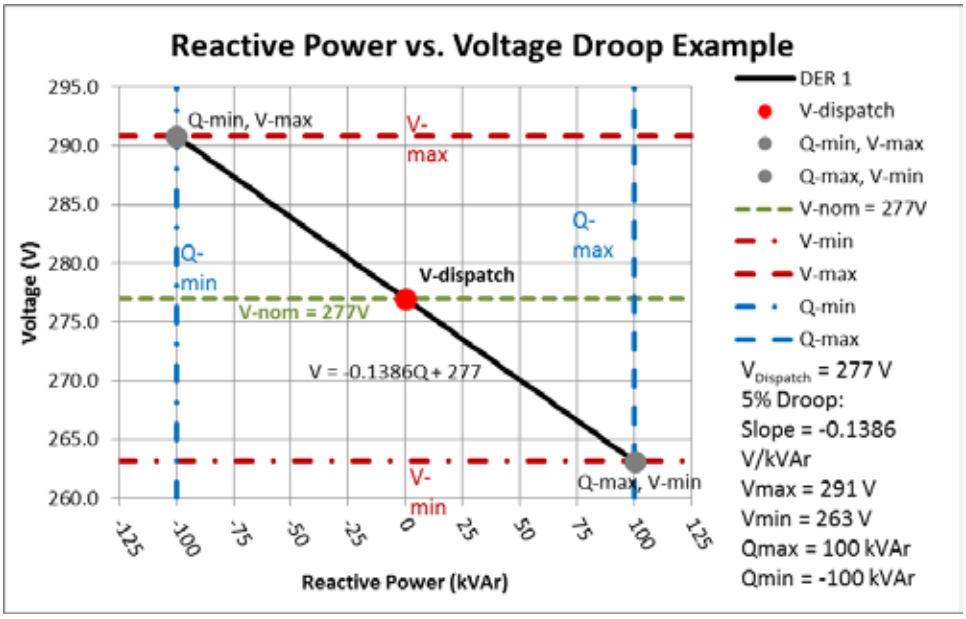

Figure 10. Voltage vs. reactive power droop example

Dispatching a source with a different value for $V_{request}$ or Q* has the effect of sliding the droop curve vertically up or down so that it remains within the bounds of Q-min and Q-max while the voltage bounds change. For example, if $V_{request}$ were changed to 285V, then the voltage bounds V-max and V-min would change to 285V ±13.9V or 298.9V and 271.1V, respectively.

When multiple sources are interconnected, they can share the voltage and reactive power requirements of the electrical bus. This internal, local control allows for steady-state and transient voltage stability based only on local information. If a voltage difference occurs between sources, a reactive current results. Using the Q vs V droop the source dynamically adjusts its output voltage in the direction which minimizes this reactive power flow between sources. In addition, reactive power flow can be optimized or intentionally biased by a high-level supervisory controller to achieve aggregated benefits such as improving a customer's utility power factor.

3.1.6 Frequency control

A grid-forming voltage source does not require a phase-locked loop to track frequency; instead the real power vs. frequency droop control provides frequency adjustment. During an islanding event, the resulting loss of power contribution from (or export to) the utility requires the sources and loads to rebalance themselves with respect to one another. Because each source is operated as a voltage source, the current necessary to satisfy the load is drawn automatically without control action.

Measuring this current, the controller calculates the instantaneous power ($P_{measured}$) and reduces or increases the inverter's output frequency as prescribed by the real power vs. frequency droop, M_p. Typically, this is 1-5% frequency droop over the full power range. For an energy storage device, the range is from maximum charging level to maximum discharge. The sources will share the load requirements according to their individual real power vs. frequency droop slopes. At the AEP test site, all gains were equal and generally tested at 1%.

At the bottom of Figure 9, the real power vs. frequency droop function is illustrated. In this figure, one can see that the function has a number of input variables two of which are our focus here: dispatched real power ($P_{dispatch}$), and measured real power output ($P_{measured}$). Figure 11 shows an example using an isolated source with rated real power output from 0kW to 100kW, and a linear real power vs. frequency droop curve with a slope of 1%, 0.006 Hz/kW. This means a 100kW change in output real power will result in a 0.6Hz change in frequency on a 60Hz system. The real power vs. frequency droop curve has an inverse relationship and therefore a negative slope, -0.006Hz/kW. The dispatched real power, $P_{dispatch}$, is the desired amount of real power that the unit will deliver at the dispatched frequency, $F_{dispatch}$. The frequency boundaries, f-min and f-max, are determined using $P_{dispatch}$ and the real power vs. frequency droop function. The real power boundaries, P-min and P-max, are determined by the rated real power capability of the source.

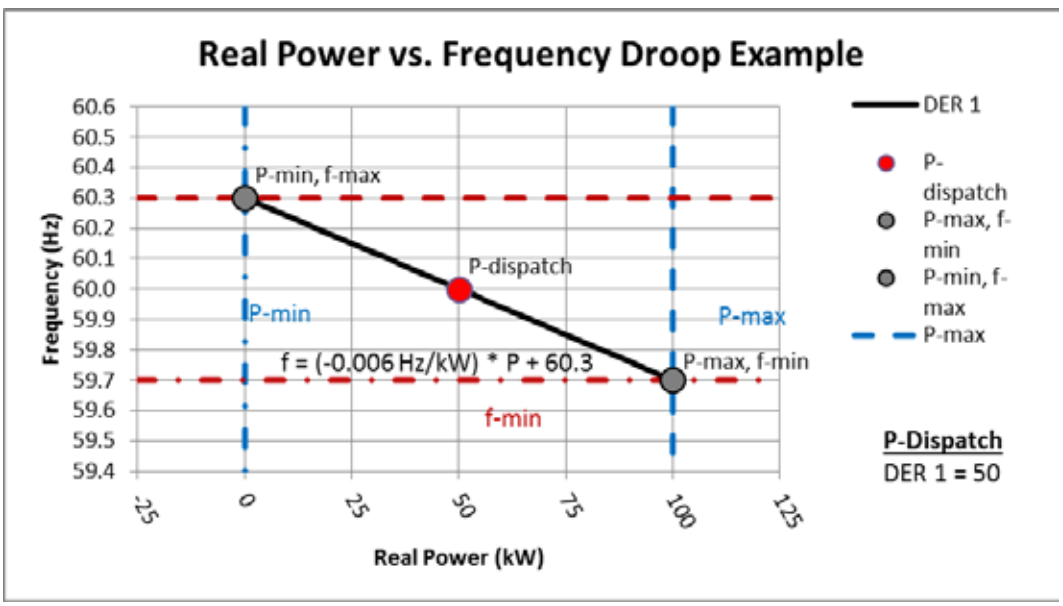

Figure 11. Real Power vs. Frequency Droop Example

In Figure 11, $P_{dispatch}$ = 50kW with a droop, m_p, of 1% (0.006Hz/kW). The inverter's frequency is defined as $\omega_{inverter} = \omega_{base} + m_p(P_{dispatch} - P_{measured})$. The total frequency range is 0.6Hz, in this example from 60.3Hz to 59.7Hz. Dispatching the source with a different value for $P_{dispatch}$ slides the droop curve vertically up or down so that it remains within the bounds of 0 to 100kW while the frequency bounds change. For example, if $P_{dispatch}$ was changed to 0 kW, then the frequency would change to 60Hz and 59.4Hz, respectively. When $P_{dispatch}$ is 100kW, the frequency range is now 60.6Hz to 60Hz.

3.1.7 Source Real Power Sharing

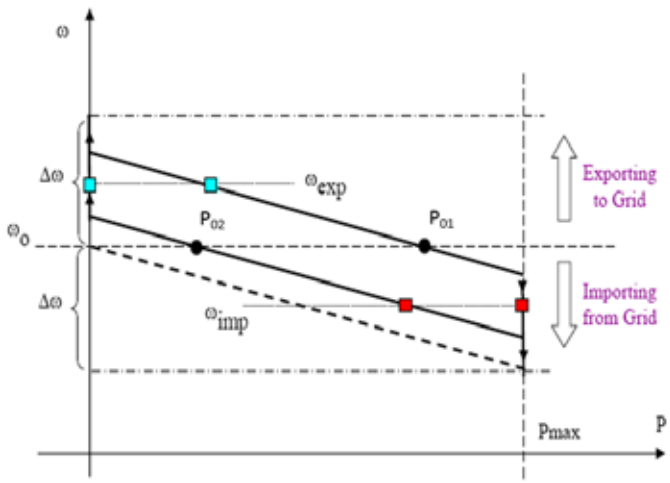

Figure 12. Power vs. frequency droop

Figure 12 shows real power vs. frequency droop for two sources. The slope is chosen by allowing the frequency to droop by a given amount, $\Delta\omega$, as power increases from zero to maximum output. Figure 12 also shows the power set points P_{01} and P_{02} for two units. The set point is the amount of power injected by each unit when operating at the dispatch frequency. When the microgrid is connected to the utility, loads receive power from both the grid and local DER units. With the CERTS autonomous control, if utility connection is lost because of a disturbance such as a voltage sag, fault, blackout, or an IEEE 1547 event, the grid interface switch will automatically isolate the microgrid and it will continue operating as an island.

When the microgrid islands from the utility any difference between power supply and load demand must be satisfied immediately. Because the microgrid sources are voltage sources they continue to regulate the microgrid voltage and the current necessary to satisfy the load is supplied according to ($\bar{\boldsymbol{V}} = \bar{\boldsymbol{I}}\,\boldsymbol{Z}$). This change in source current output occurs with no re-dispatch from the control. Each source adjusts output by a proportion related to the individual source's impedance. For simplicity if the sources are of a similar rating the change in power output will be approximately evenly split between the two. As the source output current is changing it is being measured by the control. Using this new $P_{measured}$, the control drives the output frequency in the direction giving by the real power vs. frequency droop function.

Synchronous or inverter-based voltage sources follow this real power vs. frequency droop function, adjusting their output frequency according to changes in the real power dispatch and/or changes in the source output power. Externally, this adjustment in frequency leads to a phase-angle difference between the sources and the electrical bus, which in turn leads to a new real power flow. This process of measuring the real power output and adjusting frequency is dynamic and results in a new, stable power flow following a transient event such as a load step.

In this example, the new operating point will be at a frequency lower than the prior value. After a short period of time the sources settle at the new power output, P_{02}. The additional load will be approximately shared between the two sources as long as they are not exceeding their rating. When the increased power output exceeds the rating of a source, for example Unit 1, then Unit 1 needs Unit 2 to provide additional power to prevent the microgrid from shutting down. This mechanism for overload relief is called Pmax and is discussed in the next subsection. If the microgrid changes to islanded operation while exporting power to the grid, then the new frequency will be higher, corresponding to a lower power output from the sources. The mechanism for addressing these situations is also discussed in the next subsection.

3.1.8 Power Limit Controller (P_{max}/P_{min})

In the CERTS Microgrid Concept, sources protect themselves from sustained overload by driving the frequency down when a unit becomes overloaded. A load increase can cause a source to overshoot its power rating, called P_{max}. A sustained overload can stall the internal combustion engine, collapse the direct-current bus voltage of PV, or cause the inverter to shut down on over-current. Additionally a minimum power point also exists, called P_{min}. These minimum power points must also be handled correctly or they can result in the undesired shut down of the source.

In the CERTS Microgrid Concept, the initial approach to enforcing P_{max} and P_{min} power limits is to recognize that not all sources will be at these limits at the same time. The strategy is, therefore, to transfer power from an overloaded unit to one that is not yet at P_{max} or conversely transfer power to an underloaded unity from one that is not yet at $P_{min.}$ This is achieved by rapidly decreasing the inverter's frequency when P_{max} is exceeded and increasing the frequency when output power is less than P_{min} (see Figure 13). Under these conditions, the rapid change in frequency of the under/overloaded source will changes the power flow to ensure that all sources are operated within their acceptable operating ranges.

Figure 13 shows an example of a power vs. frequency droop function with the P_{max}/P_{min} functionality incorporated into the control. The figure shows that once real power output reaches the source's maximum rating (100kW in this case), the P_{max} function begins continuously lowering the frequency. Because the P_{max} function is a proportional-integral function, the rate at which frequency reduces is determined by both the magnitude and duration of the overload. For example, if P_{max} = 100kW, an overload of 50kW would cause the frequency to reduce more quickly than would an overload of 20kW. The P_{min} function acts similarly although it activates at the source's minimum power rating, P_{min} (which is equal to 0kW in this example).

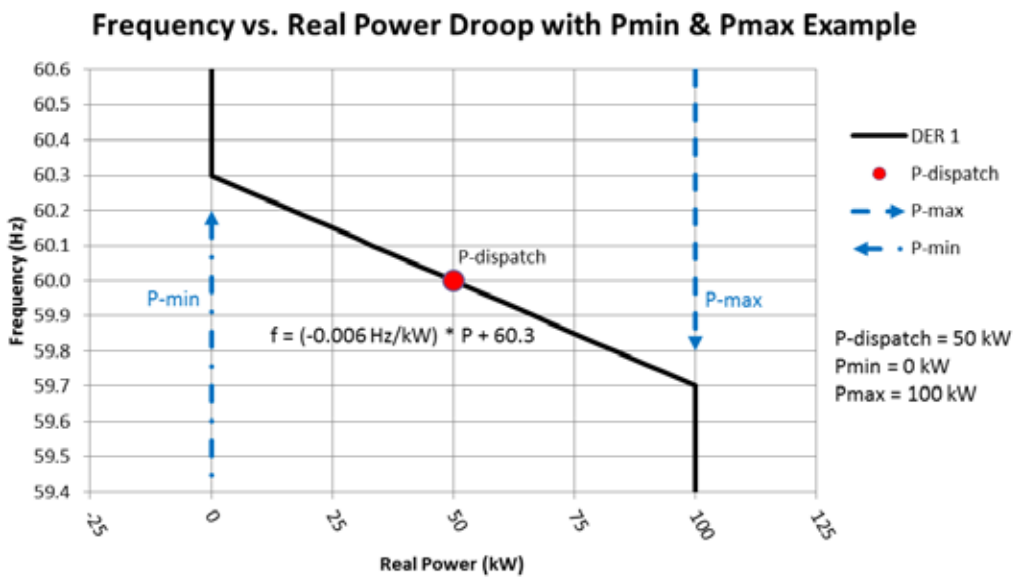

Figure 13. P_{max}/P_{min} Example

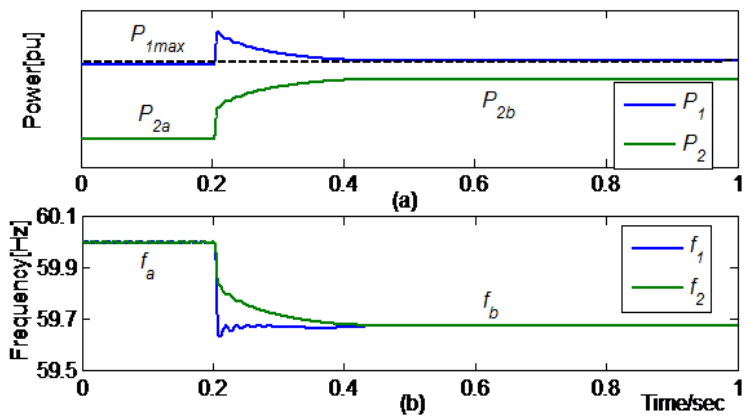

Figure 14. Pmax Example: (a) real power (b) frequency commands

Figure 14 illustrates the dynamics which prevent sustained overload. In Figure 14, the two sources initially operate at a frequency of 60 Hertz (Hz) and Unit 1 has been dispatched near its real power rating. When the microgrid islands, Unit 1 briefly overloads and the P_{max} function begins adjusting frequency. Unit 2 has surplus capacity available, responds to the falling frequency with an increase in its real power output. After a short transient period, the new system frequency is f_b, Unit 1 is at its real power rating, and Unit 2 has increased its real power output to P_{2b}. As can be seen in Figure 14, the frequency of Unit 1 drops faster than that of Unit 2, resulting in a power-angle change that in turn results in the extra power being transferred to Unit 2, relieving the overload on Unit 1 in 0.2 seconds.[8]

[8] The rate of change in frequency can also be limited through maximum and minimum frequency limits of the proportional-integral controllers. The maximum limit is typically -2Hz, and the minimum limit is typically 2Hz. For non-inverter DER units, the frequency becomes the machine's speed, with the output providing a fuel command to the prime mover. The voltage magnitude becomes the command to the exciter controller.

In severe circumstances, such as the loss of a significant amount of generation in an islanded microgrid or when a grid-connected microgrid islands with more load than supply, the entire microgrid can become overloaded. In this case, as seen above, the P_{max} control will drive the frequency down continuously. Traditional under-frequency load-shedding strategy is then used to shed load in a prioritized fashion. Frequency relays installed at the non-critical load buses detect the load-shedding frequency (LSF) and trip these loads after a delay. Similarly, the P_{min} function continuously increases the frequency until the under-load condition is removed or a protective trip is necessary.

3.1.9 Transitions between grid-connected and islanded operation

Many microgrids are in facilities that are also served by a larger utility grid. This arrangement requires that the microgrid transfer from grid-connected to islanded operation and back without causing problems for the utility or the end-user's facility. This framework varies by utility, although IEEE Standard 1547 is becoming the de facto standard. The standard defines an interconnection system encompassing all the equipment and functions used to connect a distributed resource to an area electric power system (the utility). Grid interface switches are placed at the points of common coupling. These switches serve many roles: as interconnection compliance points for the utility, as power-quality watchdogs for the end user, and as protection devices.

An important objective for a CERTS microgrid is to make autonomous and seamless transitions from grid-connected to islanded operation and back, without transients. The grid interface switch continuously monitors the characteristics of the utility and microgrid. If a characteristic, such as grid voltage, falls out of tolerance, the grid interface switch opens and separates the two systems. Once conditions return to normal, the grid interface switch can close either autonomously or in response to an external command. The grid interface switch monitors the voltage on both sides of the switch to ensure that the utility and microgrid voltages are within normal operating range. When this condition is satisfied, the grid interface switch activates re-closure.

The role of a grid interface switch as a power-quality watchdog for the end user is very similar to its role in interconnection compliance. However, the end consumer may disconnect at times not required by the utility, for example when the utility grid is experiencing short-term voltage sags, which can cause errors in industrial automation components such as ice-cube relays, motor drives, and computer systems. If the grid interface switch detects such an event on the utility grid, separating the microgrid from the grid minimizes or eliminates any detrimental effects to the end user's facility. Alternatively, the grid interface switch can be opened proactively to prevent anticipated power-quality problems such as when a large weather system is entering the area.

3.2 Detailed Multi-unit Operating Characteristics with Test Results

This subsection discusses in greater detail several aspects of the autonomous control concepts introduced in section 3.1, including illustrations provided by results obtained at the CERTS/AEP Test Bed.

3.2.1 Load sharing when the microgrid is connected to a utility grid

When a microgrid based on the CERTS Microgrid Concept is interconnected to a near-infinite synchronous source such as the macro utility grid, the effective bus frequency is held nearly constant. Because of the power vs. frequency droop function, a CERTS source operating at 60Hz would produce dispatched real power as expected. The CERTS source has a nearly fixed phase angle to the electrical bus and so acts as a source that is dispatched for constant power. Changes in the microgrid load are then supplied or rejected by the utility instead of the CERTS sources. This can be very beneficial for applications such as CHP where the thermal load (rather than the electrical load) typically drives the source's power output. Interestingly, as the frequency of the utility drifts throughout the day, this leads to a similar, proportional drift in the output of each CERTS source. Although this drift is small and quite slow, a supervisory controller could be used to hold the generator outputs at or nearly at a constant value if desired. Alternatively, if the microgrid sources are given a very shallow droop slope they will act to counter frequency changes and appear as frequency regulating devices to the larger macro grid.

3.2.2 Load sharing when the microgrid operates as an island

The test bed result shown in Figure 15 illustrates autonomous load sharing during an islanding event. The three sources in the figure (A1, A2, and B1) each have the voltage and frequency controls described above. Each source has a P_{max} of 60kW and a P_{min} of 0.0kW with a 1% frequency droop. Total microgrid load is 106kW in real power and 20kVAR reactive power. The grid provides 20kW with A1, A2, and B1 providing 32kW, 28kW, and 26kW, respectively, for a total 86kW. The top plot in Figure 15 shows the power imported from the grid (or flowing through the grid interface switch), labeled "SS power" and the power provided by each source. The islanding event takes place at time = 0, which is the time when the grid interface switch is opened. The three other plots are the current provided by Phase A of each of the three sources. The power sharing among the three sources in response to loss of grid power is inherent in the CERTS Microgrid Concept. Having automatically adjusted to the loss of power from the grid, the system is stable, and an optimizing controller could re-dispatch each source to optimize the power flow as desired.

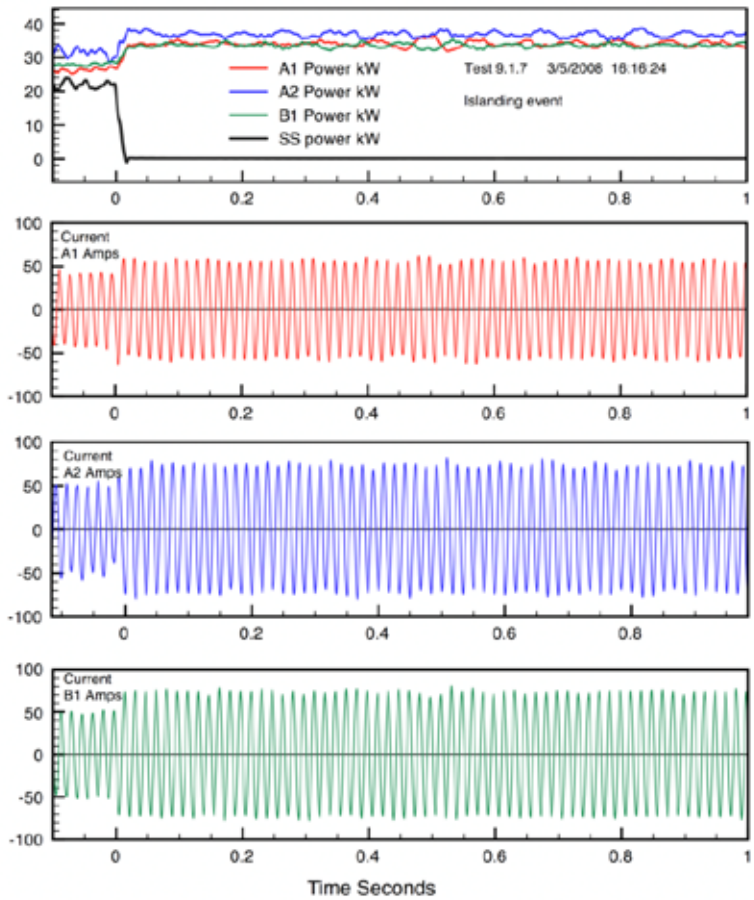

Figure 15. Example of islanding with three sources

3.2.3 Managing overloads when the microgrid operates as an island

As noted in subsection 3.1, often, some grid-forming sources in a microgrid will reach their power limits while others have not. A load increase can then cause the grid-forming sources that have reached their power limits to become overloaded. Two types of overload conditions can arise when grid-forming inverters are used: (a) one or more of the sources are overloaded, or (b) all of the sources are overloaded. Overload relief is the function of the power limit controller (P_{max}/P_{min}), which actively controls a source's frequency.

When some but not all of the sources in a microgrid are overloaded, the controller reduces the frequency of the overloaded source faster than the frequency of other sources, which results in a frequency difference among sources. This frequency difference during the transient reduces the phase angle of the overloaded source relative to other sources, so its output power can be reduced. The extra loads of the overloaded source are thereby transferred to other sources, which are not overloaded.

When all the sources are overloaded, frequency continues to drop, activating under-frequency load shedding. The lower part of Figure 15 shows the overload mitigation controller, which is a proportional-integral controller, added to the power vs. frequency droop control where k_{ppmax} and k_{ipmax} are the

proportional gain and integral gain, respectively. Note that there is a zero upper/lower limiter in this controller, which indicates that this controller will only be activated when P exceeds P_{max} or when P is below P_{min}.

3.2.4 Transferring an overload to another source

Consider a two-source microgrid, as represented in Figure 16 to demonstrate how the extra load of one source is autonomously transferred to the other with no communication required. In Figure 16, Z_i (i =1, 2) is line impedance including the source coupling inductance X_L; Z_{Load} represents the load; E_i is voltage magnitude of source; and P_i is the real power. P_1 and P_2 are expressed in equations (4) and (5) where Z_{ii} and Z_{ij} (i ≠ j) are the input impedances and transfer impedances, respectively, and α_{ii} and α_{ij} (i ≠ j) are the complementary angles of the impedance angles, respectively. δ_{12} is the phase angle between E_1 and E_2, which is expressed in equation 6, where ω_i (i =1, 2) is the frequency of each source, and δ_{12}^0 is the initial value. In steady state, ω_1 is equal to ω_2. In a low-voltage system, usually X ≥ R (considering the coupling inductance X_L), so both $\delta_{12} - \alpha_{12}$ and $\delta_{12} + \alpha_{12}$ belong to $[-\pi/4, \pi/4]$.

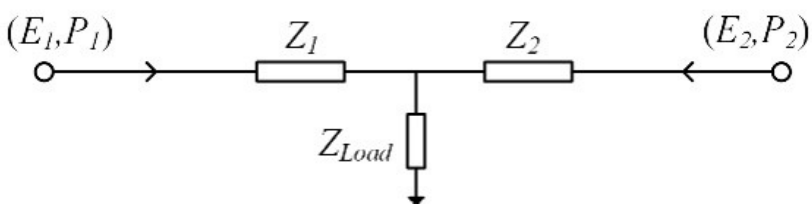

Figure 16. A two-source microgrid

If one source becomes overloaded, it can reduce its own frequency, thereby transferring the extra load to the other source. For example, when Source 2 becomes overloaded, the controller of Source 2 will reduce ω_2, which results in the increase of δ_{12}. According to equations (4) and (5), P_1 increases until Source 2 is no longer overloaded.

$$P_1 = \frac{E_1^2}{|Z_{11}|} sin\, \alpha_{11} + \frac{E_1 E_2}{|Z_{12}|} sin(\delta_{12} - \alpha_{12}) \tag{4}$$

$$P_2 = \frac{E_2^2}{|Z_{22}|} sin\, \alpha_{22} - \frac{E_1 E_2}{|Z_{12}|} sin(\delta_{12} + \alpha_{12}) \tag{5}$$

where

$$\delta_{12} = \int (\omega_1 - \omega_2)\, dt + \delta_{12}^0 \tag{6}$$

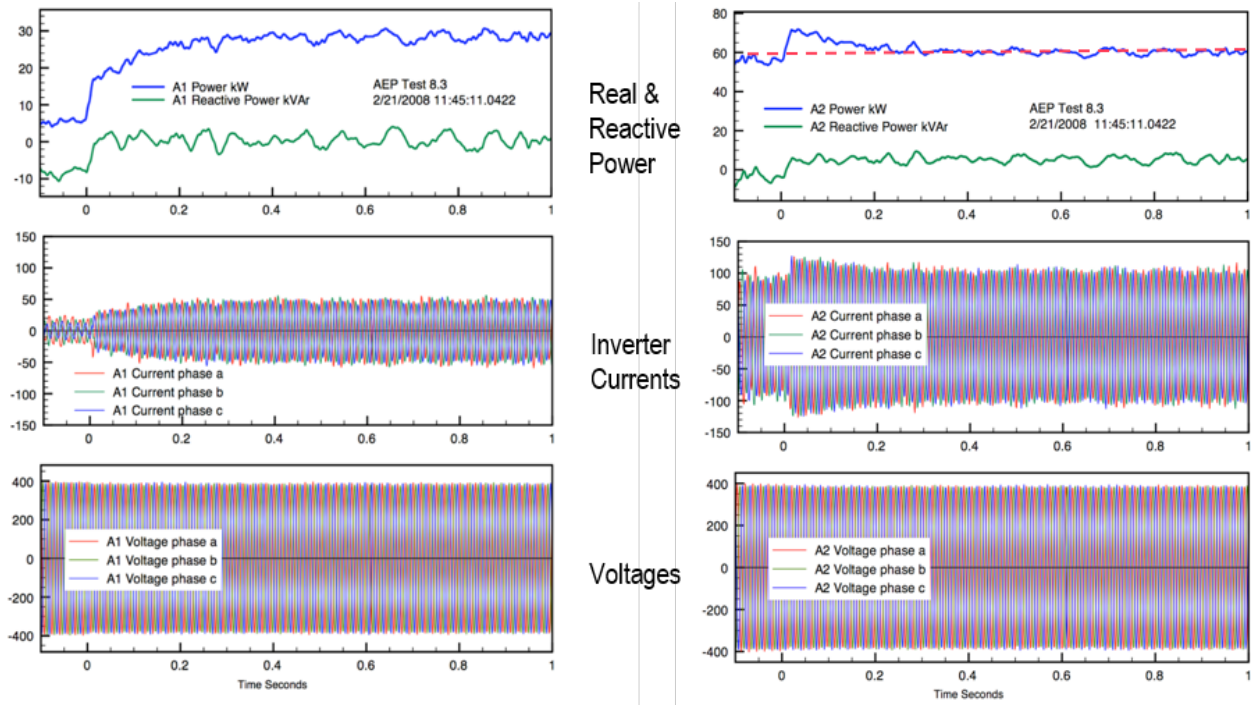

Figure 17. On-site test results from the AEP/CERTS microgrid test bed

Figure 17 presents test results that illustrate how the extra load of source A2 has been transferred to source A1 by the overload mitigation control. The microgrid is initially grid connected with A1 supplying 5kW and A2 supplying 55kW. The load is 90kW, and the maximum power of each source is 60kW. The microgrid disconnects from the grid at 0.0 seconds. After islanding, the microgrid loses 30kW power from the grid, so both A1 and A2 instantaneously increase their output by 15kW. The right panel of Figure 17 indicates that the output of A2 overshoots its steady-state maximum for less than 200 milliseconds, peaking at 70kW, but then the controls back off the generation while unit A1 increases its output to meet its share of the load. The new steady-state operating point for A1 is 29kW and for A2 is 60kW. Note that the reactive output is greatly reduced. Voltage magnitudes are unchanged for both sources, which demonstrates the stiffness of the inverter voltages. The current traces are from the inverters, which temporarily exceed their maximum power of 60kW.

3.2.5 Shedding load based on under-frequency

In severe circumstances, such as loss of a large generation source in an islanded microgrid or when a grid-connected microgrid goes into islanded mode with loads demanding significantly more power than the combined capacity of sources, the microgrid can become overloaded. When all the sources are overloaded, one solution is to trip non-critical loads. As seen above, the P_{max} controller will drive the frequency down. A traditional under-frequency load-shedding strategy (LSF) can be used. The frequency relays installed at the non-critical load buses detect LSF and can trip loads with a delay of two or three cycles.

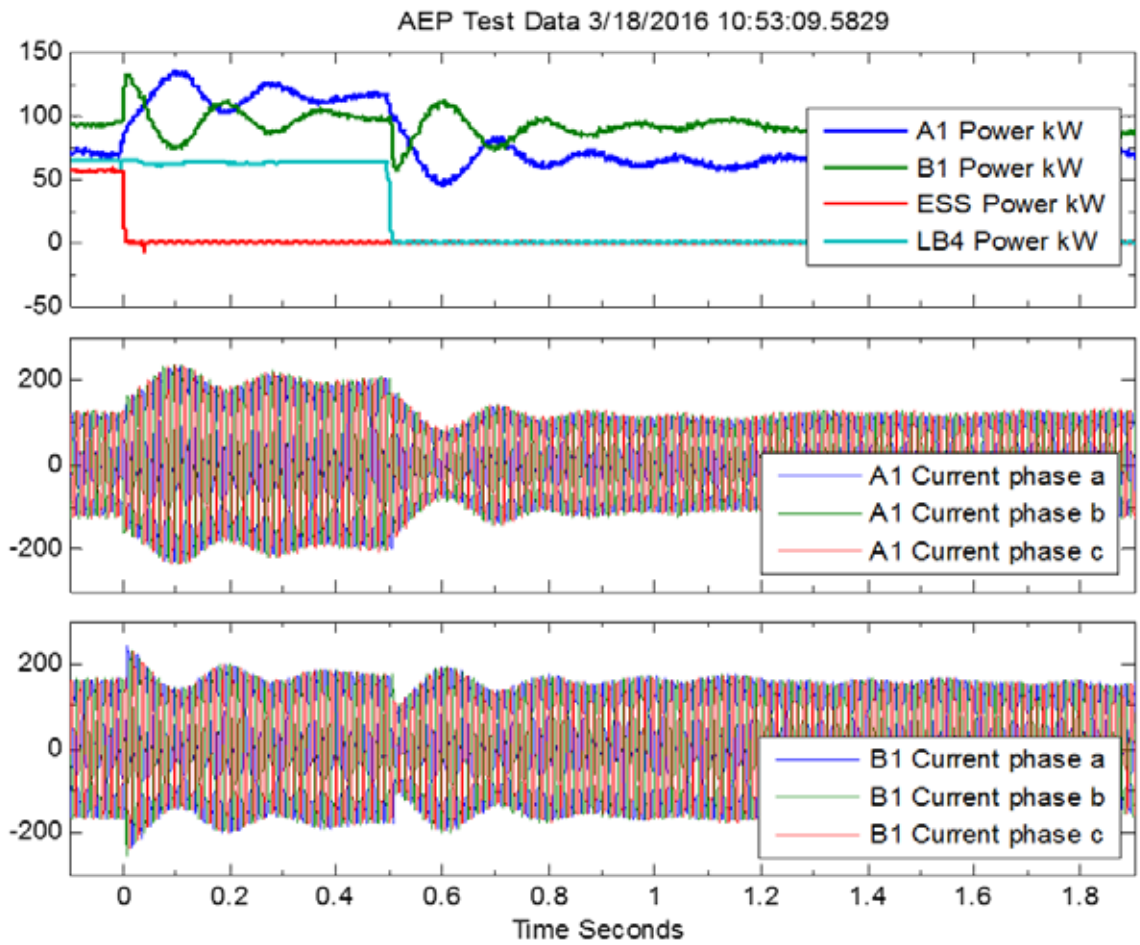

Figure 18. Demonstration of under-frequency load shedding

Figure 18 shows the AEP test bed response of a natural-gas-based synchronous generator (B1) and an inverter source (A1) to the loss of a third 100kW source. A1, B1, and the third source are initially operating as a stable islanded microgrid with a total load of 220kW. The LSF is set as 59Hz. At 0.0 seconds the energy storage system (ESS) is tripped as a contingency. Both A1 and B1 increase their output power to supply the load after the ESS is tripped. However, the total 220kW load exceeds the 193kW maximum generation capacity of A1 and B1, so both of these sources become overloaded. The overload mitigation controllers continue dropping the system frequency. At about 0.45 seconds, the LSF is reached. After a delay of about three cycles, the frequency relay trips 65kW of load, reducing total load from 220kW to 155kW. The microgrid survives.

3.2.6 The influence of the power limit controller (P_{max}/P_{min}) on survivability of the microgrid

A microgrid's ability to survive, or operate through a significant transient event, is influenced by the value of the coupling reactance, X_L (Figure 19) along with the proportional-integral gains in the P_{max}/P_{min} controller. The small signal stability boundary shown in Figure 19 demonstrates the relationship

between X_L and proportional gain in the power limit controller for K_{ppmax} from 1 radians per second (rad/s) to 120 rad/s and X_L from 0.02 per unit (p.u.) to 0.14 p.u. As shown in Figure 19, the stability boundary is approximately linear. The results show that when X_L becomes larger, K_{ppmax} has a larger range to maintain the system stability, and, when X_L becomes smaller, the system is more likely to become unstable even with a small increase in K_{ppmax}. The point "a" represents the values used for the CERTS load-transfer test bed result shown earlier in Figure 17, with K_{ppmax} = 5 rad/s and X_L = 0.1163 p.u. Points "b" and "c" represent other values that reduce the overload energy and thus the stress on the inverter's devices.

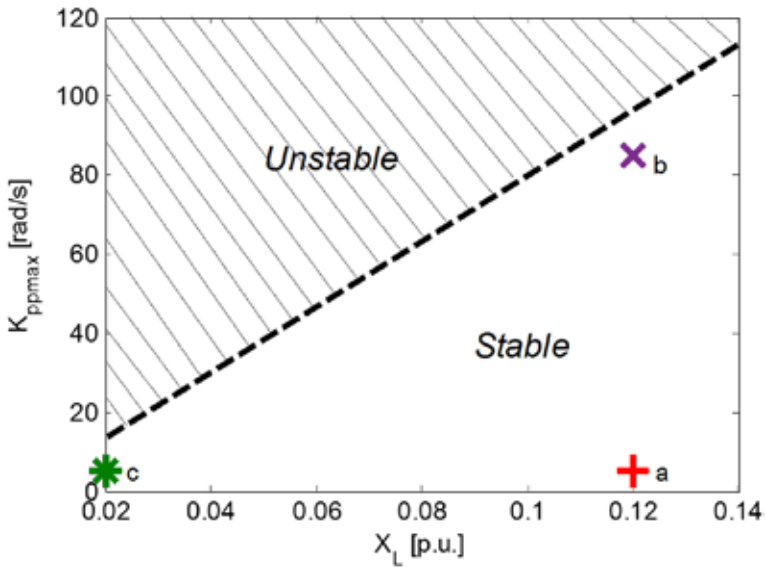

Figure 19. Small signal stability boundary considering variation of Kppmax and XL

The frequency load-shedding time of 0.5 seconds in Figure 18 can also be greatly reduced. Increasing K_{ppmax} from 5 rad/s to 28 rad/s reduces the trip time to 0.15 seconds. It should be noted that with larger gains (point b), the oscillating currents become larger during transient. Simulation indicates that the oscillating currents can increase to four times the rated currents if the proportional gain is increased to 60 rad/s.

3.2.7 Transition between grid-connected and islanded operation

The grid interface switch supports the CERTS Microgrid Concept of local stand-alone functionality, optimized with the addition of a communications system overlay. Each switch, whether semiconductor or mechanical, is operated by an intelligent protection relay. The switch logic can be proved by a commercial protection relay, for example an SEL 700GT or SEL-547. These protection relays can monitor for a number of out-of-tolerance conditions: over-current, over- and under-frequency, over- and under-voltage, anti-islanding, reverse power, and synchronism with the grid for re-closing. If any of these measured values are out of range (except for synchronism, which would not apply in these instances), the grid interface switch would immediately open and island the microgrid from the larger utility system.

Figure 20 shows the microgrid's response to a power-quality event at the AEP test site. The event appears to be phase-a to phase-b to ground fault on the utility. The depth of the voltage sag is mild, and the duration is short. The cause was either an intermittent fault (like a tree contact) or a distant fault that was cleared by a downstream re-closer. To our knowledge, no upstream distribution protection equipment operated to clear this fault. This fault resulted in an 83% voltage sag between phases a and b of the distribution supply for 100 milliseconds (see top voltage plot in Figure 20). Voltage Load Meter 4 is in the microgrid, and Voltage Meter 6 is outside the microgrid (see Figure 5). The middle voltage plot, for Voltage Load Meter 4, shows the high quality of the load's voltage during this event. The response of the grid interface switch shown in the bottom plot indicates detection and opening time of around one cycle. In this case the grid interface switch is thyristor-based and can open in one-half cycle.

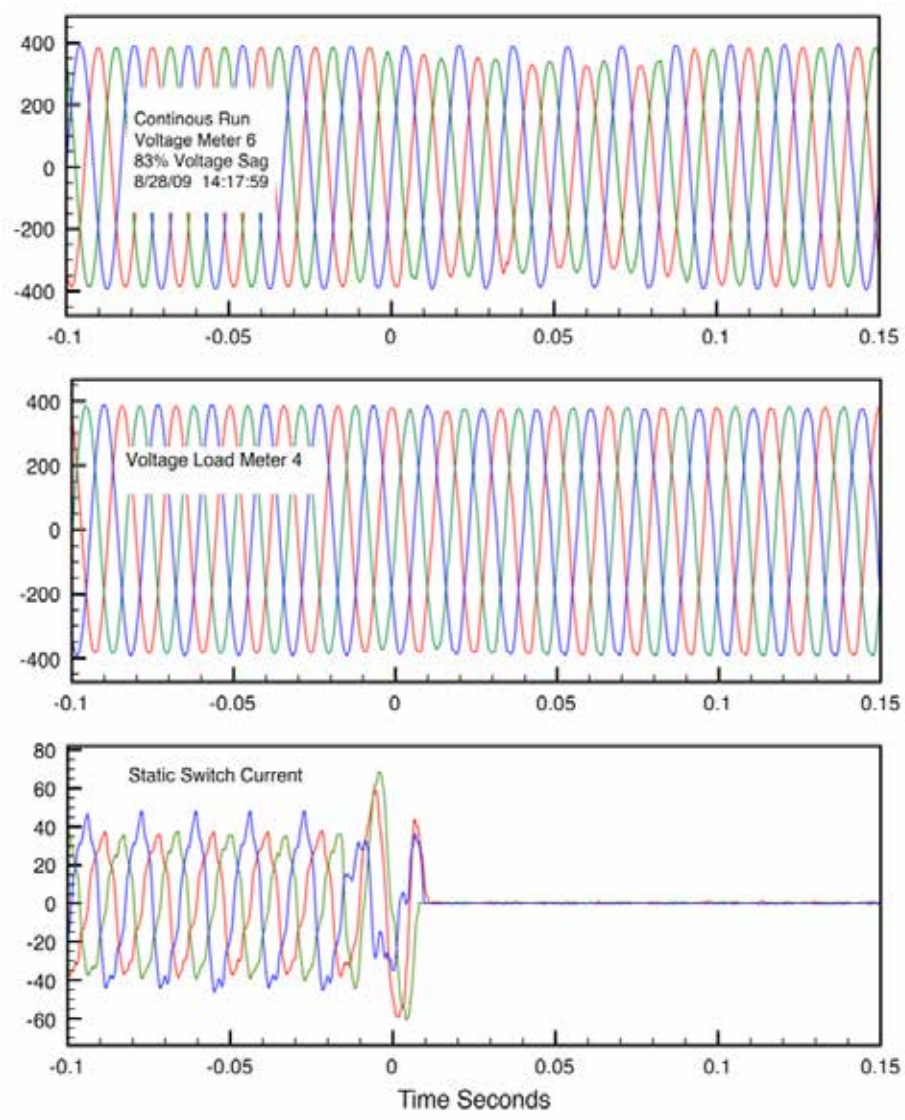

Figure 20. Response to a power-quality event

The grid interface switch can reclose autonomously or by an external command after the event that triggered the islanding is resolved. The switch monitors to ensure that the utility and microgrid voltages are both within the normal operating range before reclosing. The switch is closed when the voltage phase angle, d, across the switch passes through zero. Figure 21 illustrates the effect of re-closure at 0° and re-closure early by 27°. Re-closing at 0° results in virtually no current transient; re-closing early results in a large current transient. Early closure was tested for demonstration, in phase closure is preferred.

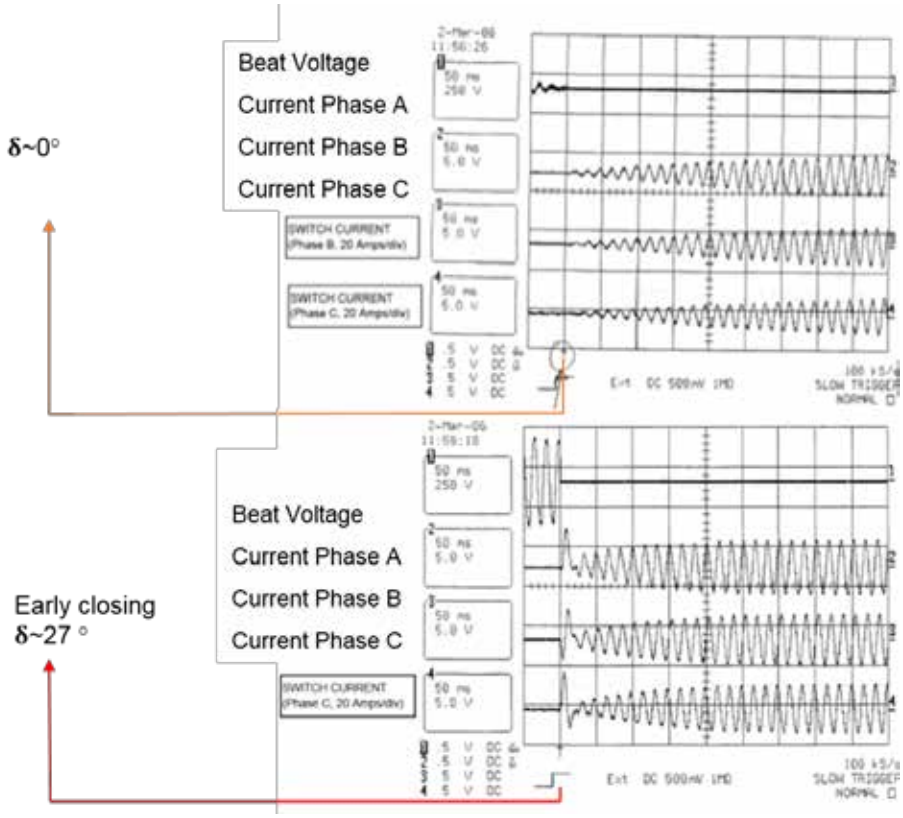

Figure 21. Lab test of seamless re-closing of grid interface switch

Figure 22 shows the switch currents during the reclosing of a thyristor-based grid interface switch at the AEP test site. The harmonics, including the neutral, are a result of unbalanced utility voltages interacting with the transformer in zone 1 (see Figure 5). The harmonics are confined to zone 2. The loads in zones 3, 4, and 5 have balanced voltages and are free of harmonics. Sources A1, B1, and the battery energy system see these harmonics with no effect on their operation because of the positive-sequence transformation used in the calculation of P, Q, and V, (see Figure 5).

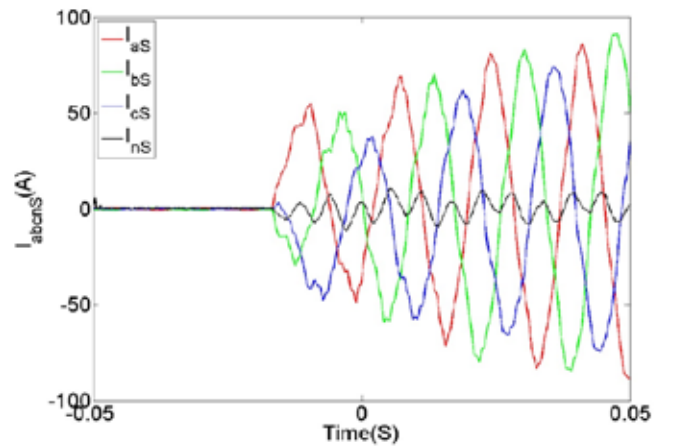

Figure 22. Current through grid interface switch during reclosing

3.3 Protection

CERTS' fundamental approach to microgrid protection uses the same strategies for both islanded and grid-connected operation. Two key elements of CERTS microgrid protection are (a) the grid interface switch, and (b) sources within the microgrid. The grid interface switch is designed to open for all faults. With the switch open, faults within the microgrid need to be cleared independent of the grid. Faults on the power grid can draw high currents from the microgrid; however, because the grid interface switch can open in less than a cycle, these currents are limited. Once islanded, the microgrid can provide power and voltage to its islanded load. On the utility side, standard grid protection is needed. Grid interface switch devices can be thyristor-based with opening times of one-half cycle or more traditional breakers taking three or more cycles to clear. The longer the clearing time, the greater the stress on the microgrid and its inverters.

IEEE Standard 1547 is becoming the grid interface switch standard. As noted above, this standard defines an interconnection system including all the equipment and functions used to connect a distributed resource to the utility grid. One or more grid interface switches are placed at points of common coupling where they function as interconnection compliance points for the utility, among other roles.

Regarding utility compliance, IEEE Standard 1547 dictates both the conditions under which a microgrid can be interconnected to an area electric power system and under what conditions the microgrid must separate from that system. The primary intent is to ensure safe, stable operation of the utility system. As noted earlier, in a microgrid designed according to the CERTS Microgrid Concept, the grid interface switch continuously monitors the characteristics of the power flowing through it. If one of these characteristics, such as voltage, falls out of tolerance, the switch opens and separates the two systems. Once conditions return to an acceptable range, the grid interface switch can permissively allow a synchronized re-closure.

Fault protection within the microgrid depends on the microgrid sources, which are typically synchronous machines and inverters. The two basic ways to control power electronics inverters, described above in Section 3.1.1, have significant effect on the protection design. As described earlier, grid-following sources can easily control real and reactive power as well as fault currents, but faults will not necessary increase output current unless the device has advanced controls. Normally, the available fault current is controlled to less than 2 p.u. primarily because of cost. By contrast, grid-forming inverters are controllable voltage sources behind a coupling reactance, much like grid-tied synchronous generators. During faults, grid-forming inverters behave like synchronous machines, providing high levels of current.

An example of grid-forming current output is shown in Figure 23. This is AEP Test 6.1.2, based on loss of a utility source and conducted on March 9, 2007. In this test, one source was operating with a three-phase, 500kW load on the utility side of the grid interface switch. The event was to open the feeder from the utility, which would place the full 500kW load on a single 60kW source. The grid interface switch was to open in one cycle, but it did not because of an error in the tripping controls. This resulted in the 500kW load across a single inverter source for 12 cycles. The traces for this event are shown in Figure 23. The solid curve is the current provided by source A1, and the dashed curve is the voltage at A1's transformer. The 500kW load was imposed at time = 0. The current shot up to 500 amps, which is nearly four times the rated current. Simultaneously, the voltage reduced by approximately 50% through an inter-current loop, which smoothly reduced the output voltage, holding the output current to four per unit. After 12 cycles, the grid interface switch opened, removing the large load, and the voltage returned to normal. This event demonstrates a high short current from a grid-following inverter. The design and rating of the grid-following inverter is important for determining available currents for clearing faults.

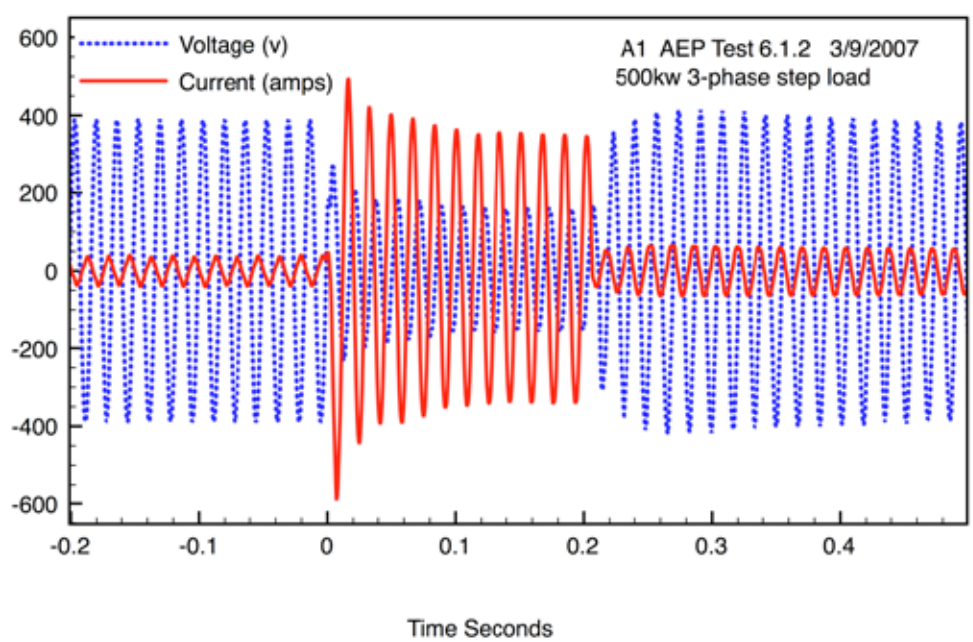

Figure 23. High current from voltage source inverter

Constructing a microgrid based on CERTS microgrid protection is straightforward. Consider a building with two 100kW voltage source inverters that can each output 2 p.u. current. If all building feeder loads are less than 50kVA, the breakers on the faulted feeder can see up to 8 p.u. tripping current. For feeder loads outside this range, we need a more advanced protection system or higher current ratings for the inverters, or one inverter can be replaced with a synchronous machine. Campus microgrids present a more complicated protection problem, which is outside the scope of this document.

4. Publications and Guide to Technical Reports

This section organizes and lists the publications and test bed technical reports prepared over the course of the project. Section 4.1 lists all publications related to the CERTS microgrid project, and Section 4.2 lists technical reports. Section 4.3 links each of the tests conducted to the technical reports in which the test results can be found.

4.1 CERTS Microgrid Publications

Below is a list of publications directly or generally related to the CERTS Microgrid Test Bed Project.

2018

Du, Wei, Robert H. Lasseter, and Amrit S. Khalsa. "Survivability of Autonomous Microgrid." *IEEE Transactions on Smart Grid*. In Press. DOI: 10.1109/TSG.2018.2829438.

2017

Khalsa, Amrit S., and Surya Baktiono. *CERTS Microgrid Test Bed Smart Load Report: Phase 2*. December 2017. https://certs.lbl.gov/publications/certs-microgrid-test-bed-smart-load-0.

Du, Wei, and Robert H. Lasseter. "Overload Mitigation Control of Droop-Controlled Grid-Forming Sources in a Microgrid." In *2017 IEEE Power and Energy Society General Meeting*, 16-20 July, Chicago IL. IEEE, 2017. DOI: 10.1109/PESGM.2017.8274300.

Renjit, Ajit A., Abrez Mondal, Mahesh S. Illindala, and Amrit S. Khalsa. "Analytical Methods for Characterizing Frequency Dynamics in Islanded Microgrids with Gensets and Energy Storage." *IEEE Transactions on Industry Applications,* 2017. DOI: 10.1109/TIA.2017.2657481.

Pattabiraman, Dinesh, Robert H. Lasseter, and Thomas M. Jahns. "Feeder Flow Control Method with Improved Power Sharing Performance in Microgrids." In *2017 IEEE Power & Energy Society (PES) General Meeting*, 16-20 July, Chicago IL. IEEE, 2017. DOI 10.1109/PESGM.2017.8273919.

2016

Renjit, Ajit A., Abrez Mondal, Mahesh S. Illindala, and Amrit S. Khalsa. "Analytical methods for characterizing frequency dynamics in islanded microgrids with gensets and energy storage." In *2016 IEEE Industry Applications Society Annual Meeting*, 1-8 October 2016, Portland OR. IEEE, 2016. DOI: 10.1109/IAS.2016.7731949.

Khalsa, Amrit, and Surya Baktiono. *CERTS Microgrid Test Bed Battery Energy Storage System Report: Phase 1*. October 2016. https://certs.lbl.gov/publications/certs-microgrid-test-bed-battery.

Pulcherio, Mariana, Ajit A. Renjit, Mahesh Illindala, Joseph H. Eto, David Klapp, and Robert H. Lasseter. "Evaluation of Control Methods to Prevent Collapse of a Mixed Source Microgrid." *IEEE Transactions on Industry Applications,* Volume: 52, Issue: 6, Nov.-Dec. 2016. DOI: 10.1109/TIA.2016.2599139.

Pulcherio, Mariana, Ajit A. Renjit, Mahesh Illindala, Amrit S. Khalsa, and Joseph H. Eto. "Evaluation of control methods to prevent prime-mover stalling in a mixed source microgrid." In *IEEE Industrial & Commercial Power Systems Technical Conference*. 1-5 May 2016, Detroit MI. IEEE, 2016. DOI: 10.1109/ICPS.2016.7490249.

Hart, Philip J., Robert H. Lasseter, and Thomas M. Jahns. "Reduced-order harmonic modeling and analysis of droop-controlled distributed generation networks." In *2016 IEEE 7th International Symposium on Power Electronics for Distributed Generation Systems (PEDG)*. 1-9 June, Vancouver, BC Canada. IEEE, 2016. DOI: 10.1109/PEDG.2016.7527023.

Chen, Zhe, Dinesh Pattabiraman, Robert H Lasseter, and T. M Jahns. "CERTS microgrids with photovoltaic microsources and feeder flow control." *2016 IEEE Energy Conversion Congress and Exposition (ECCE)*. 18-22 September 2016, Milwaukee WI. IEEE, 2016. DOI: 10.1109/ECCE.2016.7854910.

2015

Renjit, Ajit A., Mahesh S. Illindala, and Abrez Mondal. *CERTS Microgrid: Modeling, Analysis and Control of Distributed Energy Resources - Phase I*. December 2015. https://certs.lbl.gov/publications/certs-microgrid-modeling-analysis-and.

Mondal, Abrez, Mahesh S. Illindala, and Amrit S. Khalsa. "Design and operation of smart loads in an industrial microgrid." In *2015 IEEE/IAS 51st Industrial & Commercial Power Systems Technical Conference (I&CPS)*. 5-8 May 2015, Calgary, AB Canada. IEEE, 2015. DOI: 10.1109/ICPS.2015.7266425.

Mondal, A., Mahesh Illindala, S. Khalsa, David Klapp, and Joseph H. Eto. "Design and Operation of Smart Loads to Prevent Stalling in a Microgrid." *IEEE Transactions on Industry Applications* Vol. 52, No. 2 (2015): 1184-1192. DOI: 10.1109/TIA.2015.2483579.

Renjit, Ajit A., Mahesh S. Illindala, and David A. Klapp. "Modeling and analysis of the CERTS microgrid with natural gas powered distributed energy resources." In *2015 IEEE/IAS 51st Industrial & Commercial Power Systems Technical Conference (I&CPS) 2015 IEEE/IAS 51st Industrial & Commercial Power Systems Technical Conference (I&CPS)*, 5-8 May 2015, Calgary, AB Canada. IEEE, 2015.DOI: 10.1109/ICPS.2015.7266435.

Hart, Philip J, Austin Nelson, Robert H Lasseter, and Thomas M Jahns. "Effect of power measurement filter properties on CERTS microgrid control performance." *2015 IEEE 6th International Symposium on Power Electronics for Distributed Generation Systems (PEDG)*. 22-25 June, Aachen, Germany. IEEE, 2015. DOI: 10.1109/PEDG.2015.7223064.

2014

Mondal, Abrez, Mahesh S. Illindala, Ajit A. Renjit, and Amrit S. Khalsa. "Analysis of limiting bounds for stalling of natural gas genset in the CERTS microgrid test bed." In *2014 IEEE International Conference on Power Electronics, Drives and Energy Systems (PEDES)*, 16-19 December, Mumbai, India. IEEE, 2014. DOI: 10.1109/PEDES.2014.7041998.

Alegria, Eduardo, Tim Brown, Erin Minear, and Robert H. Lasseter. "CERTS Microgrid Demonstration with Large-Scale Energy Storage and Renewable Generation." *IEEE Transactions on Smart Grid,* Vol. 5, No. 2 (2014): 937-943. DOI: 10.1109/TSG.2013.2286575.

Renjit, Ajit A., Mahesh S. Illindala, and David A. Klapp. "Graphical and Analytical Methods for Stalling Analysis of Engine Generator Sets." *IEEE Transactions on Industry Applications,* Vol. 50, No. 5 (2014): 2967-2975. DOI: 10.1109/TIA.2014.2305803.

Hart, Philip J., P.J. Kollmeyer, L.W. Juang, Robert H. Lasseter, and Thomas M. Jahns. "Modeling of second-life batteries for use in a CERTS microgrid." In *2014 IEEE Power and Energy Conference at Illinois (PECI) 2014 Power and Energy Conference at Illinois (PECI)*, 28 Feb-1 March 2014, Champaign IL. IEEE, 2014. DOI: 10.1109/PECI.2014.6804554.

Mondal, Abrez, David A. Klapp, Mahesh S. Illindala, and Joseph H. Eto. "Modeling, analysis and evaluation of smart load functionality in the CERTS Microgrid." In *2014 IEEE Energy Conversion Congress and Exposition (ECCE)*, 14-18 September 2014, Pittsburgh PA. IEEE, 2014. DOI: 10.1109/ECCE.2014.6954034.

Hart, Philip J., Thomas M. Jahns, and Robert H. Lasseter. "Performance characteristics of a hybrid CERTS microgrid electric vehicle charging station." In *2014 IEEE Energy Conversion Congress and Exposition (ECCE) 2014 IEEE Energy Conversion Congress and Exposition (ECCE)*, 14-18 September 2014, Pittsburgh PA. IEEE, 2014. DOI: 10.1109/ECCE.2014.6953850.

Panora, Robert, Joseph E. Gehret, Melinda M. Furse, and Robert H. Lasseter. "Real-World Performance of a CERTS Microgrid in Manhattan." *IEEE Transactions on Sustainable Energy,* Vol. 5, No. 4 (2014). DOI: 10.1109/TSTE.2014.2301953.

Du, Wei, Qirong Jiang, Micah J. Erickson, and Robert H. Lasseter. "Voltage-Source Control of PV Inverter in a CERTS Microgrid." *IEEE Transactions on Power Delivery,* Vol. 29, No. 4 (2014). DOI: 10.1109/TPWRD.2014.2302313.

2013

Renjit, A. A., M. S. Illindala, Robert H. Lasseter, Micah J. Erickson, and David Klapp. "Modeling and control of a natural gas generator set in the CERTS microgrid." In *2013 IEEE Energy Conversion Congress and Exposition (ECCE)*, 15-19 September 2013, Denver CO. IEEE, 2013. DOI: 10.1109/ECCE.2013.6646903.

Liebold, Chase, Surya Baktiono, and David A. Klapp. *Smart Load Report: Smart Loads as a Functional Component when Installed in a CERTS Microgrid (CERTS Phase III)*. March 2013. https://certs.lbl.gov/publications/smart-load-report-smart-loads.

Liebold, Chase, Surya Baktiono, and David A. Klapp. *Synchronous Generator Report: Capability and Compatibility of a Synchronous Generator when Installed in a CERTS Microgrid (CERTS Phase III)*. March 2013. https://certs.lbl.gov/publications/synchronous-generator-report.

2012

Klapp, David, R. Zimmerly, and J. Howard. *CERTS Microgrid Tecogen InVerde INV100 Test Report*. Prepared for CERTS by American Electric Power, March 2012. https://certs.lbl.gov/publications/certs-microgrid-tecogen-inverde.

Renjit, Ajit A., and Mahesh S. Illindala. "Graphical and analytical methods for stalling of engine generator set." In *2012 IEEE International Conference on Power Electronics, Drives and Energy Systems (PEDES)*. 16-19 December 2012, Bengaluru, Karnataka India. IEEE, 2012. DOI: 10.1109/PEDES.2012.6484436.

Erickson, Micah J., Thomas M. Jahns, and Robert H. Lasseter. "Impact of active resistance on dynamic power responses in a CERTS microgrid." In *2012 IEEE Power and Energy Conference at Illinois (PECI)*. 24-25 February 2012, Champaign IL. IEEE, 2012. DOI: 10.1109/PECI.2012.6184614.

Erickson, Micah J., Thomas M. Jahns, and Robert H. Lasseter. "Improved power control bandwidth of grid-forming sources in a CERTS microgrid." In *2012 IEEE Energy Conversion Congress and Exposition (ECCE)*. 15-20 September 2012, Raleigh NC. IEEE, 2012. DOI: 10.1109/ECCE.2012.6342459.

2011

Lasseter, Robert H., Joseph H. Eto, Ben Schenkman, John Stevens, Harry T. Volkommer, David Klapp, Ed Linton, Hector Hurtado, and Joyashree Roy. "CERTS Microgrid Laboratory Test Bed." *IEEE Transactions on Power Delivery,* Vol. 26, No. 1 (2011). DOI: 10.1109/TPWRD.2010.2051819.

Klapp, David, R. Zimmerly, and J. Howard. *CERTS Microgrid Mechanical Switch Test Report*. Prepared for CERTS by American Electric Power, June 2011. https://certs.lbl.gov/publications/certs-microgrid-mechanical-switch.

Erickson, Micah J., Thomas M. Jahns, and Robert H. Lasseter. "Comparison of PV inverter controller configurations for CERTS microgrid applications." In *2011 IEEE Energy Conversion Congress and Exposition (ECCE)*. 17-22 Sept. 2011, Phoenix AZ. IEEE, 2011. DOI: 10.1109/ECCE.2011.6063832.

Lasseter, Robert H. "Smart Distribution: Coupled Microgrids." *Proceedings of the IEEE*. Vol. 99, No. 6 (2011). DOI: 10.1109/TPWRD.2010.2051819.

2010

CERTS. *CERTS Microgrid Phase Two Test Report*. June 2010. https://certs.lbl.gov/publications/certs-microgrid-phase-two-test-report.

Erickson, Micah J., and Robert H. Lasseter. "*Integration of battery energy storage element in a CERTS microgrid*." In *2010 IEEE Energy Conversion Congress and Exposition (ECCE)*. 12-16 September, Atlanta GA. IEEE, 2010. DOI: 10.1109/ECCE.2010.5617986.

Lasseter, Robert H., and Joseph H. Eto. *Value and Technology Assessment to Enhance the Business Case for the CERTS Microgrid*. May 2010. https://certs.lbl.gov/publications/value-and-technology-assessment.

2009

Eto, Joseph H., Robert H. Lasseter, Ben Schenkman, John Stevens, Harry T. Volkommer, David Klapp, Ed Linton, Hector Hurtado, Jean Roy, and Nancy J. Lewis. *CERTS Microgrid Laboratory Test Bed: California Energy Commission Public Interest Energy Research (PIER) Program Final Report*. February 2009. https://certs.lbl.gov/publications/certs-microgrid-laboratory-test-bed.

CERTS. *CERTS Microgrid Phase Two Results*. 2009. https://certs.lbl.gov/publications/certs-microgrid-phase-two-results.

Krishnamurthy, Shashank, and Robert H. Lasseter. *Control of Wound Field Synchronous Machine Gensets for Operation in a CERTS Microgrid*. Prepared for CERTS by the University of Wisconsin, Madison. March 2009. https://certs.lbl.gov/publications/control-wound-field-synchronous.

Stevens, John, and Ben Schenkman. *DC Energy Storage in the CERTS Microgrid*. Sandia National Laboratories, June 2009. https://certs.lbl.gov/publications/dc-energy-storage-certs-microgrid.

Nikkhajoei, Hassan, and Robert H. Lasseter. "Distributed Generation Interface to the CERTS Microgrid." *IEEE Transactions on Power Delivery.* Vol. 24, No. 3 (2009). DOI: 10.1109/TPWRD.2009.2021040.

Lasseter, Robert H., and Micah J. Erickson. *Integration of Battery-Based Energy Storage Element in the CERTS Microgrid.* Prepared for CERTS by the University of Wisconsin, Madison. October 2009. https://certs.lbl.gov/publications/integration-battery-based-energy.

Eto, Joseph H., Robert H. Lasseter, Ben Schenkman, John Stevens, David Klapp, Harry T. Volkommer, Ed Linton, Hector Hurtado, and Jean Roy. "*Overview of the CERTS microgrid laboratory test bed*." In *Integration of Wide-Scale Renewable Resources into the Power Delivery System, CIGRE/IEEE PES Joint Symposium*. 29-31 July 2009, Calgary, AB Canada. IEEE, 2009. http://ieeexplore.ieee.org/document/5211205/.

2008

Lasseter, Robert H. “Extended CERTS microgrid.” In *2008 IEEE Power and Energy Society General Meeting*. 20-24 July 2008, Pittsburgh PA. IEEE, 2008. DOI: 10.1109/PES.2008.4596492.

Krishnamurthy, Shashank, Thomas M. Jahns, and Robert H. Lasseter. "*The operation of diesel gensets in a CERTS microgrid*." In *2008 IEEE Power and Energy Society General Meeting.* 20-24 July 2008, Pittsburgh PA. IEEE, 2008. DOI: 10.1109/PES.2008.4596500.

2007

Lasseter, Robert H. "CERTS Microgrid." In *2007 IEEE International Conference on System of Systems Engineering*. 16-18 April 2007, San Antonio TX. IEEE, 2007. DOI: 10.1109/SYSOSE.2007.4304248.

Stevens, John, and David Klapp. "CERTS Microgrid System Tests." In *2007 IEEE Power Engineering Society General Meeting*. 42-28 June 2007, Tampa FL. 2007. DOI: 10.1109/PES.2007.385793.

2006

Piagi, Paolo, and Robert H. Lasseter. "Autonomous control of microgrids." In *2006 IEEE Power Engineering Society General Meeting*. 18-22 June 2006, Montreal, Que. Canada. IEEE, 2006. DOI: 10.1109/PES.2006.1708993.

Lasseter, Robert H., and Paolo Piagi. *Control and Design of Microgrid Components*. Prepared for CERTS by the University of Wisconsin, Madison. January 2006. https://certs.lbl.gov/publications/control-and-design-microgrid.

Lasseter, Robert H. "Dynamic Distribution using (DER) Distributed Energy Resources." *2005/2006 IEEE/PES Transmission and Distribution Conference and Exhibition*, 21-24 May 2006, Dallas TX. IEEE, 2006. DOI: 10.1109/TDC.2006.1668623.

Nichols, David K., John Stevens, Robert H. Lasseter, and Joseph H. Eto. "Validation of the CERTS Microgrid Concept: The CEC/CERTS Microgrid." In *IEEE Power and Energy Society General Meeting*. 18-22 June 2006, Montreal, Canada. IEEE, 2006. DOI: 10.1109/PES.2006.1709248.

2004

Stevens, John. "Development of sources and a testbed for CERTS microgrid testing." In *2004 IEEE Power Engineering Society General Meeting.* 6-10 June 2005, Denver CO. IEEE, 2004. DOI: 10.1109/PES.2004.1373233.

Lasseter, Robert H., and Paolo Piagi. "Microgrid: A Conceptual Solution." In *IEEE Power Electronics Specialists Conference*. 20-25 June 2004, Aachen, Germany. IEEE, 2004. DOI: 10.1109/PESC.2004.1354758.

Marnay, Chris, and Owen C. Bailey. "The CERTS Microgrid and the Future of the Macrogrid." In *ACEEE Summer Study on Energy Efficiency in Buildings*, August 2004. https://certs.lbl.gov/publications/certs-microgrid-and-future-macrogrid.

2003

Lasseter, Robert H., Abbas A. Akhil, Chris Marnay, John Stephens, Jeffery E. Dagle, Ross T. Guttromson, Sakis A. Meliopoulous, Robert J. Yinger, and Joseph H. Eto. *Integration of Distributed Energy Resources: The CERTS MicroGrid Concept.* Consultant Report prepared for the California Energy Commission. October, 2003. https://certs.lbl.gov/publications/integration-distributed-energy.

2002

Feero, William E., Douglas C. Dawson, and John Stevens. *White Paper on Protection Issues of the MicroGrid Concept*. March 2002. https://certs.lbl.gov/publications/white-paper-protection-issues.

2001

Lasseter, Robert H., and Paolo Piagi. *Industrial Application of MicroGrids*. Prepared for CERTS by the University of Wisconsin, Madison. October 2001. https://certs.lbl.gov/publications/industrial-application-microgrids.

2000

Lasseter, Robert H., and Kevin Tomsovic. *Scenarios for Distributed Technology Applications with Steady State and Dynamic Models of Loads and Micro-Sources*. April 2000. https://certs.lbl.gov/publications/scenarios-distributed-technology.

1998

Lasseter, Robert H. "Control of Distributed Resources." In *Bulk Power System Dynamics and Control IV*. August 1998, Santorini, Greece. https://certs.lbl.gov/publications/control-distributed-resources.

4.2 CERTS Microgrid Test Bed Technical Reports

A number of reports have been produced for CERTS research performed at the AEP test bed. These reports, which are listed below, generally contain the test bed configuration, settings, test procedure, results, and analysis. These reports are available at https://certs.lbl.gov/research-areas/publications/microgrids or, for papers published by other organizations, can be accessed via a link on the CERTS site. Below is a list of technical reports on tests conducted at the CERTS Microgrid Test Bed; the numbering corresponds to the table in Section 4.3.

2017

[1] Khalsa, Amrit S., and Surya Baktiono. *CERTS Microgrid Test Bed Smart Load Report: Phase 2*. December 2017. https://certs.lbl.gov/publications/certs-microgrid-test-bed-smart-load-0.

2016

[2] Khalsa, Amrit, and Surya Baktiono. *CERTS Microgrid Test Bed Battery Energy Storage System Report: Phase 1*. October 2016. https://certs.lbl.gov/publications/certs-microgrid-test-bed-battery.

2013

[3] Liebold, Chase, Surya Baktiono, and David A. Klapp. *Smart Load Report: Smart Loads as a Functional Component when Installed in a CERTS Microgrid (CERTS Phase III)*. March 2013. https://certs.lbl.gov/publications/smart-load-report-smart-loads.

[4] Liebold, Chase, Surya Baktiono, and David A. Klapp. *Synchronous Generator Report: Capability and Compatibility of a Synchronous Generator when Installed in a CERTS Microgrid (CERTS Phase III)*. March 2013. https://certs.lbl.gov/publications/synchronous-generator-report.

2012

[5] Klapp, David, R. Zimmerly, and J. Howard. *CERTS Microgrid Tecogen InVerde INV100 Test Report*. Prepared for CERTS by American Electric Power. March 2012. https://certs.lbl.gov/publications/certs-microgrid-tecogen-inverde.

2011

[6] Klapp, David, R. Zimmerly, and J. Howard. *CERTS Microgrid Mechanical Switch Test Report*. Prepared for CERTS by American Electric Power. June 2011. https://certs.lbl.gov/publications/certs-microgrid-mechanical-switch.

2010

[7] CERTS. *CERTS Microgrid Phase Two Test Report*. June 2010. https://certs.lbl.gov/publications/certs-microgrid-phase-two-test-report.

2009

[8[Eto, Joseph H., Robert H. Lasseter, Ben Schenkman, John Stevens, Harry T. Volkommer, David Klapp, Ed Linton, Hector Hurtado, Jean Roy, and Nancy J. Lewis. *CERTS Microgrid Laboratory Test Bed: California Energy Commission Public Interest Energy Research (PIER) Program Final Report*. February 2009. https://certs.lbl.gov/publications/certs-microgrid-laboratory-test-bed.

[9] Appendix A: Test Bed Design Schematics

[10] Appendix B: CERTS Microgrid Test Plan

[11] Appendix C: Youtility Factory Test Plan Final Test Results

[12] Appendix D: Tecogen 60kW Inverter-Based CHP Modules: Factory Testing

[13] Appendix E: Tecogen CHP Modules Commissioning Report

[14] Appendix F: CERTS Test Bed CERTEQUIP-V06-002, CERTS Switch, Low Power Factory Acceptance Test Report

[15] Appendix G: Summary of CERTS Microgrid Static Switch Power Quality Tests at AEP Dolan, CERTS Microgrid Static Switch Testing

[16] Appendix H: CERTS Test Bed Design and Commissioning: Lessons Learned Summary

[17] Appendix I: Test Plan Section 6.0 Microgrid Test Bed System Checkout (Static Switch)

[18] Appendix J: Test Plan Section 7.0 Validate Protection Settings and Initial Fault Testing

[19] Appendix K: Test Plan Section 8.0 Reduced System Tests

[20] Appendix L: Test Plan Section 9.0 Power Flow Control Tests

[21] Appendix M: Test Plan Section 10.0 Difficult Loads

[22] Appendix N: Test Log

[23] Appendix O: Technical Advisory Committee Meeting Summary and Review Comments

[24] Appendix P: Microgrid Fault Protection Based on Symmetrical and Differential Current Components

4.3 Tests Conducted, Linked to Technical Reports Prepared

Test Description	DERs	Report	Page
Step Load: Determine a unit's ability to handle various step load increases and rejections	A1	5. CERTS Microgrid Tecogen InVerde INV100 Test Report. https://certs.lbl.gov/publications/certs-microgrid-tecogen-inverde	46
	B1	4. Synchronous Generator Report: Capability and Compatibility of a Synchronous Generator when Installed in a CERTS Microgrid. https://certs.lbl.gov/publications/synchronous-generator-report	9
	ESS	2. CERTS Microgrid Test Bed Battery Energy Storage System Report: Phase 1. https://certs.lbl.gov/publications/certs-microgrid-test-bed-battery	27
	A2P	12. CERTS Microgrid Laboratory Test Bed PIER Final Report, - Appendix D: Tecogen 60kW Inverter-Based CHP Modules: Factory Testing. https://certs.lbl.gov/publications/certs-microgrid-laboratory-test-bed	1
		13. CERTS Microgrid Laboratory Test Bed PIER Final Report, Appendix E: Tecogen CHP Modules Commissioning Report. https://certs.lbl.gov/publications/certs-microgrid-laboratory-test-bed	1
Voltage Regulation: Verify a unit's ability to maintain proper voltage output for various voltage set points and real power loads	ESS	2. CERTS Microgrid Test Bed Battery Energy Storage System Report: Phase 1. https://certs.lbl.gov/publications/certs-microgrid-test-bed-battery	49, 83
	B1	4. Synchronous Generator Report: Capability and Compatibility of a Synchronous Generator when Installed in a CERTS Microgrid. https://certs.lbl.gov/publications/synchronous-generator-report	18
	A1	5. CERTS Microgrid Tecogen InVerde INV100 Test Report. https://certs.lbl.gov/publications/certs-microgrid-tecogen-inverde	35
	A1P	19. CERTS Microgrid Laboratory Test Bed PIER Final Report, Appendix K: Test Plan Section 8.0 Reduced System Tests. https://certs.lbl.gov/publications/certs-microgrid-laboratory-test-bed	9
	A2P		
	B1P		

Test Description	DERs	Report	Page
Frequency vs. Real Power Droop Control	ESS	2. CERTS Microgrid Test Bed Battery Energy Storage System Report: Phase 1. https://certs.lbl.gov/publications/certs-microgrid-test-bed-battery	51
	ESS, A1		101
	ESS, B1		101
	B1	4. Synchronous Generator Report: Capability and Compatibility of a Synchronous Generator when Installed in a CERTS Microgrid. https://certs.lbl.gov/publications/synchronous-generator-report	24
	A1	5. CERTS Microgrid Tecogen InVerde INV100 Test Report. https://certs.lbl.gov/publications/certs-microgrid-tecogen-inverde	15
Voltage vs. Reactive Power Droop Control	ESS	2. CERTS Microgrid Test Bed Battery Energy Storage System Report: Phase 1. https://certs.lbl.gov/publications/certs-microgrid-test-bed-battery	55
	B1	4. Synchronous Generator Report: Capability and Compatibility of a Synchronous Generator when Installed in a CERTS Microgrid. https://certs.lbl.gov/publications/synchronous-generator-report	36
	A1	5. CERTS Microgrid Tecogen InVerde INV100 Test Report. https://certs.lbl.gov/publications/certs-microgrid-tecogen-inverde	22
Unbalanced Load Conditions	ESS	2. CERTS Microgrid Test Bed Battery Energy Storage System Report: Phase 1. https://certs.lbl.gov/publications/certs-microgrid-test-bed-battery	59
	B1, A1	4. Synchronous Generator Report: Capability and Compatibility of a Synchronous Generator when Installed in a CERTS Microgrid. https://certs.lbl.gov/publications/synchronous-generator-report	86
	A1, A2P	5. CERTS Microgrid Tecogen InVerde INV100 Test Report. https://certs.lbl.gov/publications/certs-microgrid-tecogen-inverde	58
	A1P, A2P	19. CERTS Microgrid Laboratory Test Bed PIER Final Report, Appendix K: Test Plan Section 8.0 Reduced System Tests. https://certs.lbl.gov/publications/certs-microgrid-laboratory-test-bed	16
	A1P, A2P	8. CERTS Microgrid Laboratory Test Bed PIER Final Report. https://certs.lbl.gov/publications/certs-microgrid-laboratory-test-bed	40
Pmax Control	ESS	2. CERTS Microgrid Test Bed Battery Energy Storage System Report: Phase 1. https://certs.lbl.gov/publications/certs-microgrid-test-bed-battery	63
	ESS, A1		146
	ESS, B1		146
	B1	4. Synchronous Generator Report: Capability and Compatibility of a Synchronous Generator when Installed in a CERTS Microgrid. https://certs.lbl.gov/publications/synchronous-generator-report	70
	B1, A2		
	A1, A2P	5. CERTS Microgrid Tecogen InVerde INV100 Test Report. https://certs.lbl.gov/publications/certs-microgrid-tecogen-inverde	63
	A1P, A2P	19. CERTS Microgrid Laboratory Test Bed PIER Final Report, Appendix K: Test Plan Section 8.0 Reduced System Tests. https://certs.lbl.gov/publications/certs-microgrid-laboratory-test-bed.	14
Pmin Control	ESS	2. CERTS Microgrid Test Bed Battery Energy Storage System Report: Phase 1. https://certs.lbl.gov/publications/certs-microgrid-test-bed-battery	71
	ESS, A1		169
	ESS, B1		
	A1P, A2P	19. CERTS Microgrid Laboratory Test Bed PIER Final Report, Appendix K: Test Plan Section 8.0 Reduced System Tests. https://certs.lbl.gov/publications/certs-microgrid-laboratory-test-bed	12

Test Description	DERs	Report	Page
Transition between Charging and Discharging	ESS	2. CERTS Microgrid Test Bed Battery Energy Storage System Report: Phase 1. https://certs.lbl.gov/publications/certs-microgrid-test-bed-battery	86
Emergency Shutdown	ESS	2. CERTS Microgrid Test Bed Battery Energy Storage System Report: Phase 1. https://certs.lbl.gov/publications/certs-microgrid-test-bed-battery	22
	B1	4. Synchronous Generator Report: Capability and Compatibility of a Synchronous Generator when Installed in a CERTS Microgrid. https://certs.lbl.gov/publications/synchronous-generator-report	7
	A1	5. CERTS Microgrid Tecogen InVerde INV100 Test Report. https://certs.lbl.gov/publications/certs-microgrid-tecogen-inverde	14
State of Charge	ESS	2. CERTS Microgrid Test Bed Battery Energy Storage System Report: Phase 1. https://certs.lbl.gov/publications/certs-microgrid-test-bed-battery	23
Motor Start with Balanced Loads	A1P, A2P	21. CERTS Microgrid Laboratory Test Bed PIER Final Report, Appendix M: Test Plan Section 10.0 Difficult Loads. https://certs.lbl.gov/publications/certs-microgrid-laboratory-test-bed	9
Motor Start with Unbalanced Loads	B1	4. Synchronous Generator Report: Capability and Compatibility of a Synchronous Generator when Installed in a CERTS Microgrid. https://certs.lbl.gov/publications/synchronous-generator-report	86
	B1, A1		
	B1, A1, A2		
	A1P, A2P	21. CERTS Microgrid Laboratory Test Bed PIER Final Report, Appendix M: Test Plan Section 10.0 Difficult Loads. https://certs.lbl.gov/publications/certs-microgrid-laboratory-test-bed	90
Black Start Capability	B1	4. Synchronous Generator Report: Capability and Compatibility of a Synchronous Generator when Installed in a CERTS Microgrid. https://certs.lbl.gov/publications/synchronous-generator-report	47
	A1, A2P, B1P	5. CERTS Microgrid Tecogen InVerde INV100 Test Report. https://certs.lbl.gov/publications/certs-microgrid-tecogen-inverde	60
	A1		63
	A1P, A2P, B1P	19. CERTS Microgrid Laboratory Test Bed PIER Final Report, Appendix K: Test Plan Section 8.0 Reduced System Tests. https://certs.lbl.gov/publications/certs-microgrid-laboratory-test-bed	31
	A1P		32
Load Step and Overload Response: Evaluate Load Relief vs. CERTS Control functionality	B1	4. Synchronous Generator Report: Capability and Compatibility of a Synchronous Generator when Installed in a CERTS Microgrid. https://certs.lbl.gov/publications/synchronous-generator-report	51
Generator Voltage Dispatch Mismatch	B1, A1	4. Synchronous Generator Report: Capability and Compatibility of a Synchronous Generator when Installed in a CERTS Microgrid. https://certs.lbl.gov/publications/synchronous-generator-report	80
Power Factor (Reactive Load Steps)	B1	4. Synchronous Generator Report: Capability and Compatibility of a Synchronous Generator when Installed in a CERTS Microgrid. https://certs.lbl.gov/publications/synchronous-generator-report	97
	B1, A1		
	B1, A1, A2		

Test Description	DERs	Report	Page
Harmonic Loads + Motor Start	B1	4. Synchronous Generator Report: Capability and Compatibility of a Synchronous Generator when Installed in a CERTS Microgrid. https://certs.lbl.gov/publications/synchronous-generator-report	103
	B1, A1		
	B1, A2		
	B1, A1, A2		
Smart Load Shedding	A1	3. Smart Load Report: Smart Loads as a Functional Component when Installed in a CERTS Microgrid. https://certs.lbl.gov/publications/smart-load-report-smart-loads	17
	B1		49
Transition to Islanded State	A1, A2	3. Smart Load Report: Smart Loads as a Functional Component when Installed in a CERTS Microgrid. https://certs.lbl.gov/publications/smart-load-report-smart-loads	52
			55
Mechanical vs. Static Grid Interface Switch Comparison	A2P	6. CERTS Microgrid Mechanical Switch Test Report. https://certs.lbl.gov/publications/certs-microgrid-mechanical-switch	All
Continuous Run	A1P, A2P, B1P	7. CERTS Microgrid Phase Two Test Report. https://certs.lbl.gov/publications/certs-microgrid-phase-two-test-report	5
Inverter Fault Contribution	A1P, A2P	7. CERTS Microgrid Phase Two Test Report. https://certs.lbl.gov/publications/certs-microgrid-phase-two-test-report	21
Protection Scheme	A1P, A2P, B1P in various configurations	7. CERTS Microgrid Phase Two Test Report. https://certs.lbl.gov/publications/certs-microgrid-phase-two-test-report	25
		18. CERTS Microgrid Laboratory Test Bed PIER Final Report, Appendix J: Test Plan Section 7.0 Validate Protection Settings and Initial Fault Testing. https://certs.lbl.gov/publications/certs-microgrid-laboratory-test-bed	All
Static Grid Interface Switch	A1P	17. CERTS Microgrid Laboratory Test Bed PIER Final Report, Appendix I: Test Plan Section 6.0 Microgrid Test Bed System Checkout (Static Switch). https://certs.lbl.gov/publications/certs-microgrid-laboratory-test-bed	All
Mixed Mode Operation: Zone and Unit power control modes	A1P, A2P	19. CERTS Microgrid Laboratory Test Bed PIER Final Report, Appendix K: Test Plan Section 8.0 Reduced System Tests. https://certs.lbl.gov/publications/certs-microgrid-laboratory-test-bed	18
	A1P, A2P, B1P	20. CERTS Microgrid Laboratory Test Bed PIER Final Report, Appendix L: Test Plan Section 9.0 Power Flow Control Tests. https://certs.lbl.gov/publications/certs-microgrid-laboratory-test-bed	All
Zone Power Control Mode	A1P, B1P	19. CERTS Microgrid Laboratory Test Bed PIER Final Report, Appendix K: Test Plan Section 8.0 Reduced System Tests. https://certs.lbl.gov/publications/certs-microgrid-laboratory-test-bed	26
	A1P, A2P, B1P	20. CERTS Microgrid Laboratory Test Bed PIER Final Report, Appendix L: Test Plan Section 9.0 Power Flow Control Tests. https://certs.lbl.gov/publications/certs-microgrid-laboratory-test-bed	All
Unit Power Control Mode	A1P, A2P, B1P	20. CERTS Microgrid Laboratory Test Bed PIER Final Report, Appendix L: Test Plan Section 9.0 Power Flow Control Tests. https://certs.lbl.gov/publications/certs-microgrid-laboratory-test-bed	All

4.4 CERTS Microgrid Test Bed Report Topics Cross Reference

This section cross-references the different types of tests conducted at the AEP CERTS Microgrid Test Bed and the DER involved in each test type along with the technical report that contains the relevant test results. Below we describe each DER listed in the cross-reference table in Section 4.3.

Generator "A1"	A "Tecogen InVerde INV-100" inverter-based, combined heat and power generator set assembled by Tecogen Inc. of Waltham, Massachusetts. The unit is fueled by natural gas and is rated to support 100 kW of electrical load and 700 kilo British thermal units per hour of thermal load. The inverter on this unit allows the engine to operate over a wide range of rotational speeds rather than at a fixed speed.
Generator "A2"	An original prototype inverter based a generator set assembled by Tecogen. The unit is fueled by natural gas and is rated to support 60 kW of electrical load. This unit is a prototype used as an intermediate step in the development of the CERTS control algorithms.
Generator "B1"	A synchronous generator set assembled by MTU Onsite Energy and controlled with a Woodward easYgen controller. The unit is fueled by natural gas and rated at 93 kW.
Energy Storage System "ESS"	A battery energy storage system assembled by Princeton Power Systems utilizing a GTIB 480-100 grid-tied inverter with 72 Marathon M12V155FT sealed lead-acid batteries arranged in two strings of 36 batteries each. The system is rated for 100 kW discharge and 50 kW charge.
Generator "A1P"	An original prototype inverter-based generator set assembled by Tecogen. The unit is fueled by natural gas and is rated to support 60 kW of electrical load. This unit is a prototype used as an intermediate step in the development of the CERTS control algorithms.
Generator "A2P"	An original prototype inverter-based generator set assembled by Tecogen. The unit is fueled by natural gas and is rated to support 60 kW of electrical load. This unit is a prototype used as an intermediate step in the development of the CERTS control algorithms.
Generator "B1P"	An original prototype inverter-based generator set assembled by Tecogen. The unit is fueled by natural gas and is rated to support 60 kW of electrical load. This unit is a prototype used as an intermediate step in the development of the CERTS control algorithms.

Note: Generators A2 and B1P are the same unit. When the current B1 unit (the synchronous gen-set) was installed, the B1P unit that occupied that location was relocated to the A2 position. The A2P unit was removed from the test bed.