Distribution Components, Systems and Operations

Emma Stewart (LLNL)
Kevin Schneider (PNNL)

Integrated Distribution System Planning Training
for Midwest/MISO Region
October 13-15, 2020

What Is a Distribution System and What Needs to Be Controlled?

Kevin Schneider
Pacific Northwest National Laboratory (PNNL)

Agenda

- Part 1: What is a Distribution System?
- Part 2: Distribution Equipment
- Part 3: Control Systems

Part 1: What Is a Distribution System?

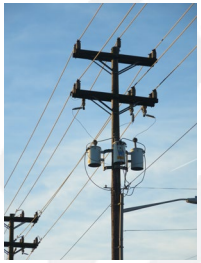

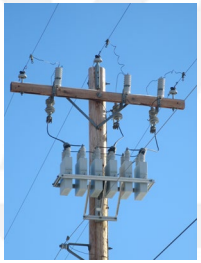

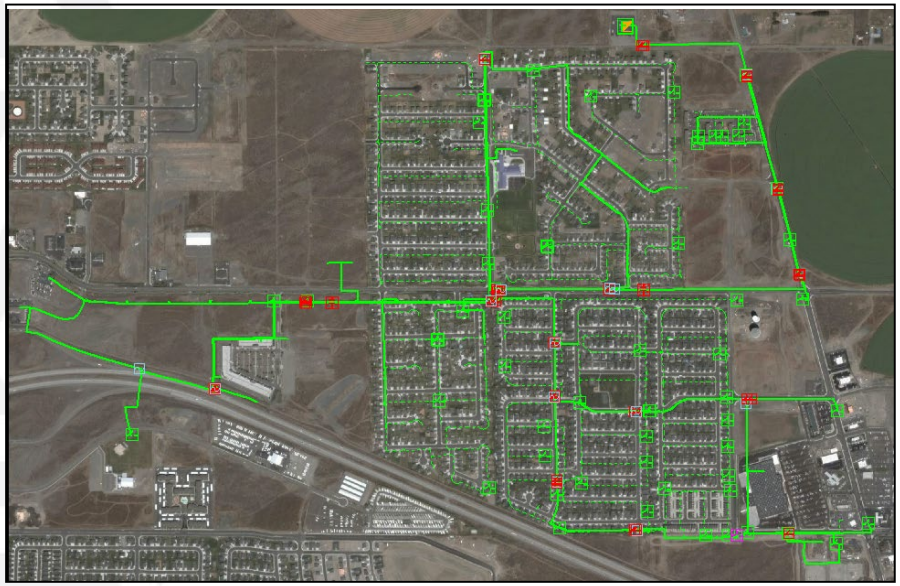

Characteristics of Modern Distribution Systems in North America

GRID MODERNIZATION LABORATORY CONSORTIUM
U.S. Department of Energy

Electrical Characteristics

- Four wire unbalanced with single and double phase laterals
- Frequency: 60 Hz
- Voltage: <50 kV
- Power: <100 MW (Generally)
- Scale: < 20 miles (Generally)
- Overhead and/or underground
- Supplied by sub-transmission systems
- Generally operated radially
- Minimal generation, but increasing

Operational Characteristics

- Regulated
  - Enforced requirements
  - Regulated rates of return
- Ownership
  - Investor Owned
  - Municipal
  - Public Utility District
  - Rural Co-operative

Direct vs. Alternating Current

Direct Current (DC)

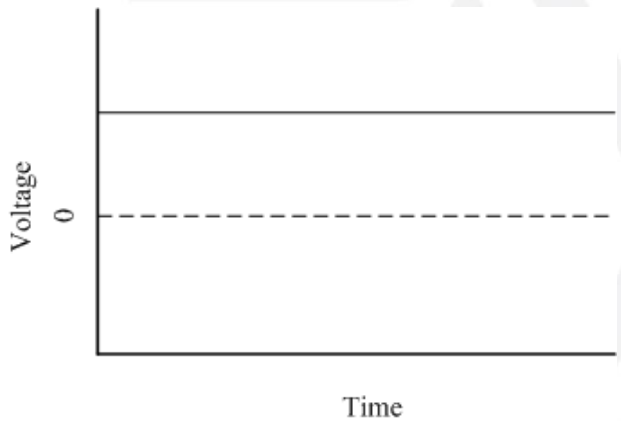

- The voltage supplied is relatively constant over time, with minor variations due to transients.
- Power electronics are necessary to effectively change the voltage.
- Batteries and Solar PV produce DC.

Alternating Current (AC)

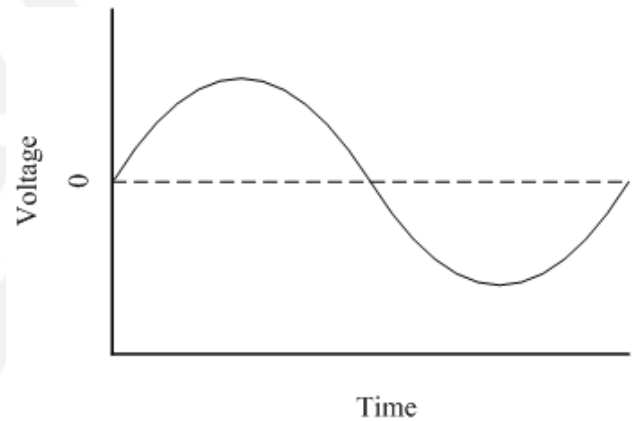

- The voltage alternates at the system frequency and passes though the zero value multiple times per second.
- Transformers enable the effective change of voltage between levels.
- Most generators produce AC.

Alternating Current

- Alternating current can be formed when a magnet, or coil, is rotated by a prime mover (e.g. engine). This is the “rotor”.
- By placing coils adjacent to the rotor, voltages are induced in the coils.
- The induced voltages cause current to flow in the adjacent coils. In this case there is a single “phase”.
- The current flows in an alternating manner, as the north and south poles of the rotor pass the stationary coils.
- Alternating current can also be produced by solid state inverters, but the process is more complicated.

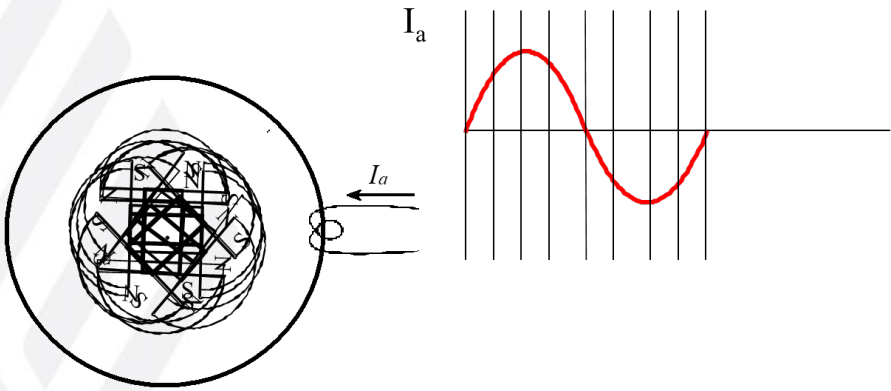

Three Phase Power

- Single phase generation is inefficient and oversized.
- Modern generators, and hence the rest of the system, use a three-phase system.
- The basis of the three-phase system is Nicolas Tesla's patent on poly-phase systems.
- Three phase has been found to be more efficient for machines because of the geometry of coil placement around the rotor.

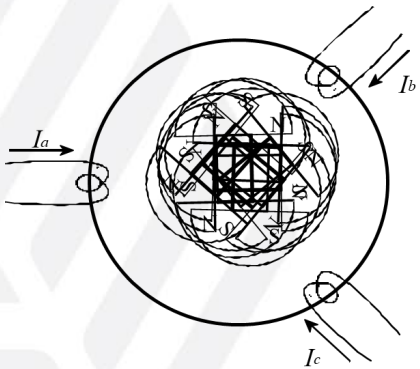

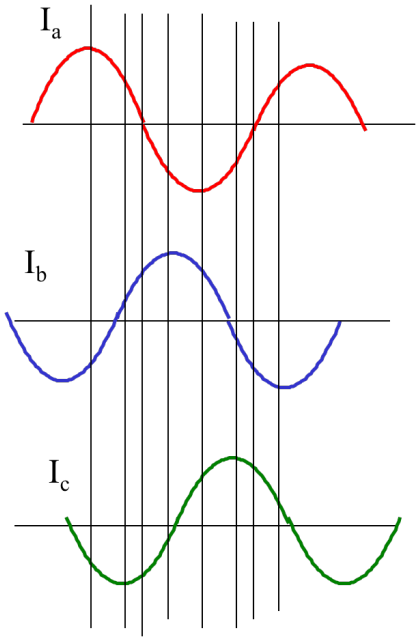

Three Phase Power

- Single phase generation is inefficient and oversized.
- Modern generators, and hence the rest of the system, use a three-phase system.
- The basis of the three-phase system is Nicolas Tesla's patent on poly-phase systems.
- Three phase has been found to be more efficient for machines because of the geometry of coil placement around the rotor.

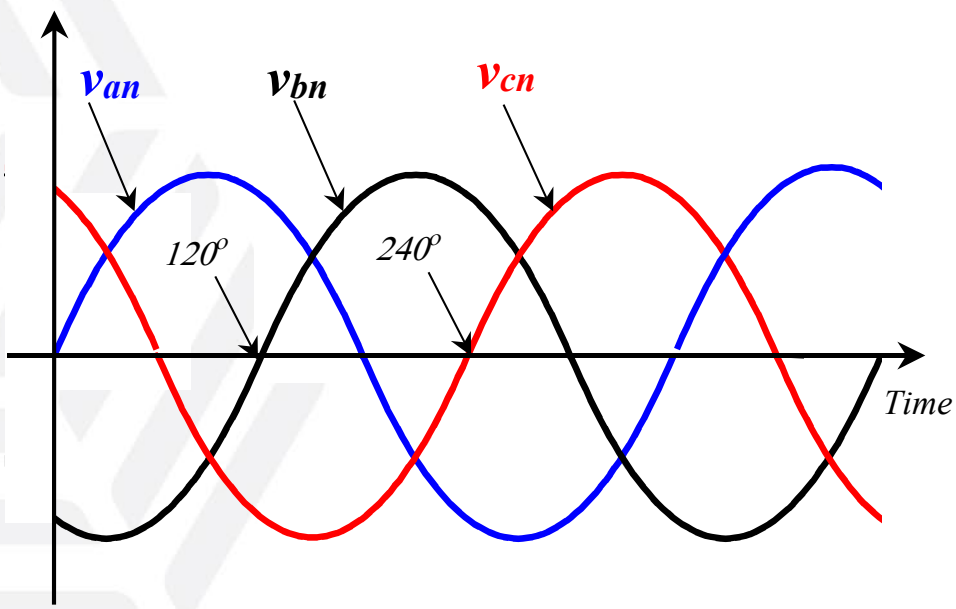

Different Types of Power

- Because electric power systems are not purely resistive, the voltage and current waveforms are not always in phase.
- The phase difference affects how much work can be done. There are three types of power to fully describe the phase shift in the steady state:
  - **Active Power** (Watts, W) (P): Power that is consumed to perform work and is represented by the component of voltage and current that are in phase.
  - **Reactive Power** (Volt Amperes Reactive, VAR) (Q): Power that is consumed to maintain electric and magnetic fields and is represented by the component of voltage and current that are out of phase.
  - **Apparent Power** (Volt Amperes, VA) (S): The power that is measured by taking measurements of the instantaneous voltage and current.

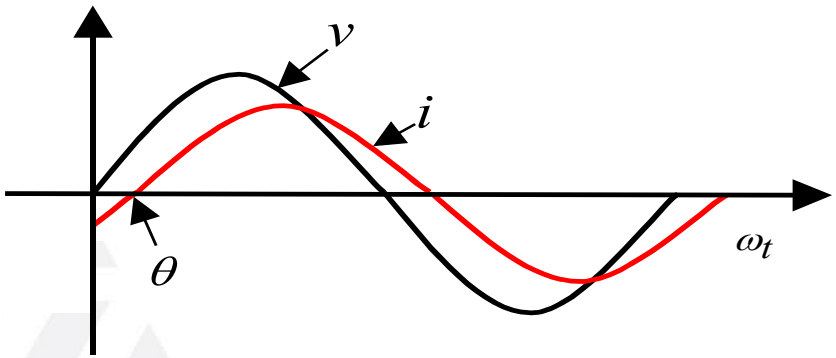

$$P = \frac{1}{2\pi}\int_0^{2\pi} \rho(t)\, d\omega t = \frac{1}{2\pi}\int_0^{2\pi} \frac{V_{\max}\, I_{\max}}{2}\,[\cos\theta - \cos(2\omega t - \theta)]\, d\omega t$$

$$P = \frac{V_{\max}\, I_{\max}}{2}\cos\theta = V_{rms}\, I_{rms}\cos\theta$$

Power factor

$$S \equiv V\, I^*$$

The Power Triangle

- Because dealing with the math associated with waveforms can be complicated, it is common for engineers to use steady state values.

- The power triangle shows the relationship between active, reactive, and apparent power in the steady-state condition.

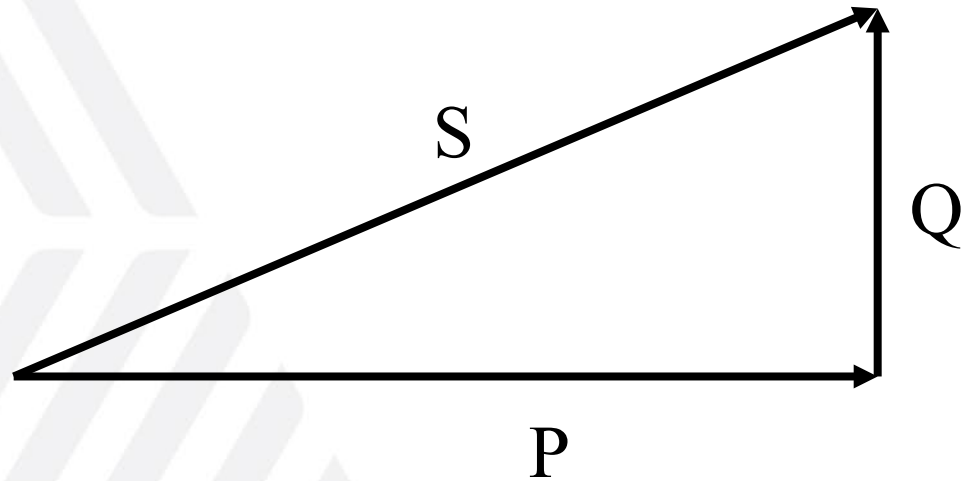

- Any amount of reactive power results in additional current flow.
  - Systems are typically inductive due to overhead lines
  - Capacitors are used to compensate for the system's natural inductance

$$S \equiv V I^*$$

$$S = P + j\,Q$$

Part 2: Distribution Equipment

Distribution Substations

- Distribution substations form the source of energy for most distribution circuits.
- Main purpose is to step down the voltage from transmission levels to levels appropriate for local distribution.
- Usually characterized by voltages up to 230 kV on the primary side and 4.2, 12.47, 13.2, 13.8, 24.9, or 34.5 kV on the secondary side.
- 12.47 kV is by far the most common voltage in the U.S.
- The power transformers commonly used in this application are two-winding type and may be single-phase or three-phase units.

Substation Transformers

- The substation transformer is one of the most expensive pieces of equipment at the distribution level.
- Substation transformers are capital assets expected to remain in operation for 30+ years, with some in service > 50 years.
- They connect the high voltage transmission system to the lower voltage distribution system.
- Overload of these units is the primary concern since it leads to significant reduction in equipment lifetime.

Distribution Equipment

- Much of the distribution level equipment can be located at the substation and/or in the field on the circuit
- Important equipment includes:
  - Conductors
  - Transformers
  - Voltage Control Devices
  - Protective devices
  - Switches

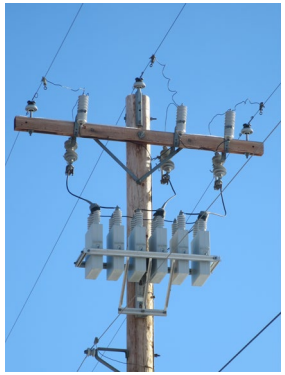
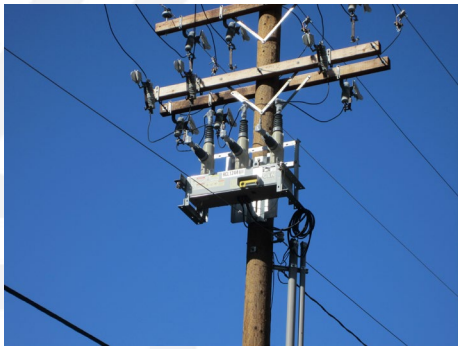

Part 3: Control Systems

Distribution Control Center

- The distribution control center is where utilities control their systems.

- For a small utility this may be no more than a laptop, but for a large utility it can be much larger. A large utility may have multiple facilities.

- Most of an operator's work is monitoring and coordinating via phone calls.

- Supervisory Control And Data Acquisition (SCADA) allows for remote data to be viewed, and for some field controls.

- More advanced systems can include:
  - Distribution management Systems (DMS)
  - Outage Management Systems (OMS)
  - Self-healing systems

Distribution Voltage Control Ranges

- American National Standards Institute (ANSI) standard C84.1 is the most widely used document for defining acceptable voltage standards.
- Like many standards, it does not have any legal standing until a governing or regulatory body adopt/mandates its use.
- The voltage supplied to the customer is generally maintained within the limits set by ANSI C84.1, Range A.
- Service voltage: voltage as measured at the customer meter.
- Utilization voltage: voltage as measured at the end-use device.

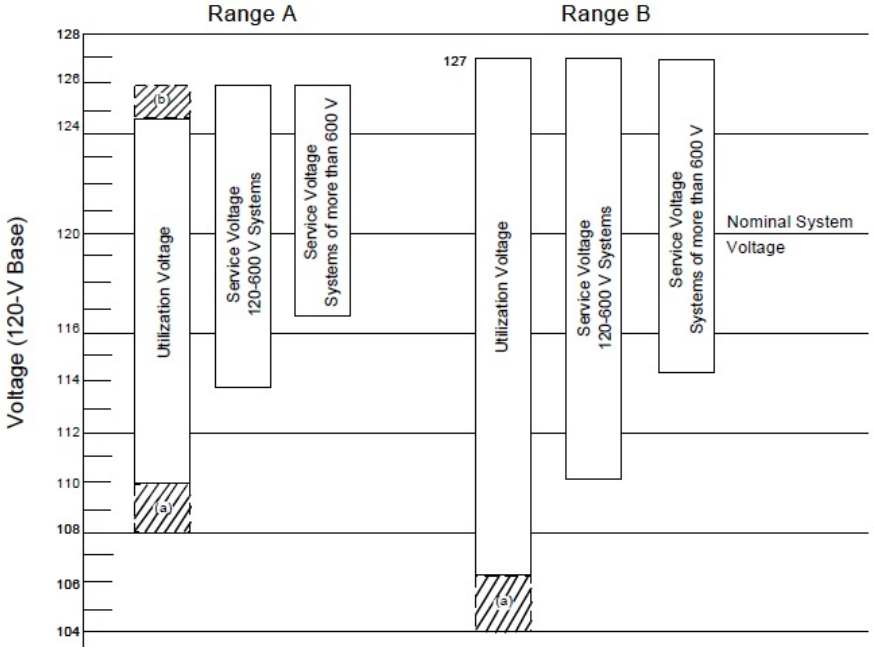

Distribution Voltage Control

- The voltage supplied to the customer is generally maintained within the limits set by ANSI C84.1, Range A.

- This is done by setting the voltage at the “head” of the feeder at the high end of the band, to ensure that the voltage drop at peak load does not exceed limits.

- The voltages shown in the figure below are the voltages seen by the end-use customer. The voltage supplied to the end-use customer will affect their energy consumption.

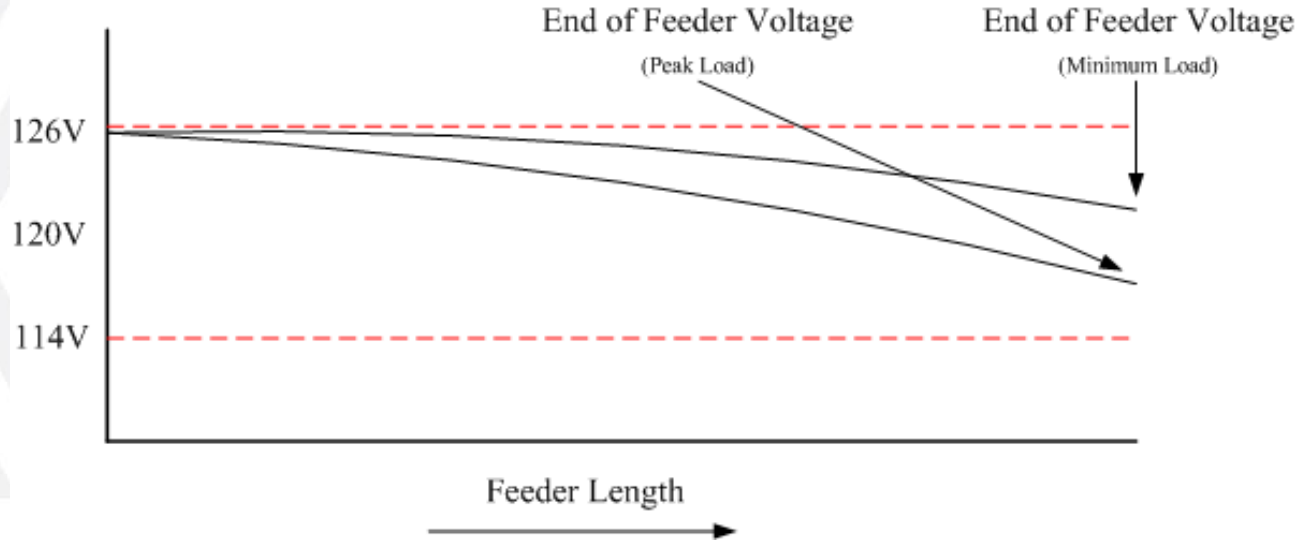

Voltage Regulators

- Regulators are often installed at the substation in order to adjust the voltage at the head of the feeder. This can help to improve the voltage regulation.
- They can also be installed in banks of three, or individually, on the circuit.
- Voltage regulators are sometimes also used at the sub-transmission level, which will affect the voltage at the distribution substation.
- Regulators are electromechanical devices that physically change the “taps” on a special type of transformer.
- Because of their electromechanical nature, over operation can lead to increased maintenance and/or reduce life expectancy.

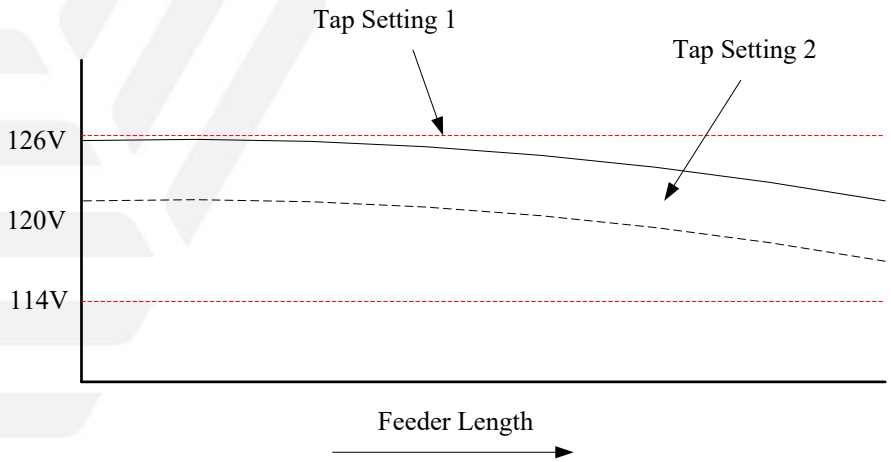

Voltage Regulators

- Regulators are often installed at the substation in order to adjust the voltage at the head of the feeder. This can help to improve the voltage regulation.
- They can also be installed in banks of three, or individually, on the circuit.
- Voltage regulators are sometimes also used at the sub-transmission level, which will affect the voltage at the distribution substation.
- Regulators are electromechanical devices that physically change the “taps” on a special type of transformer.
- Because of their electromechanical nature, over operation can lead to increased maintenance and/or reduce life expectancy.

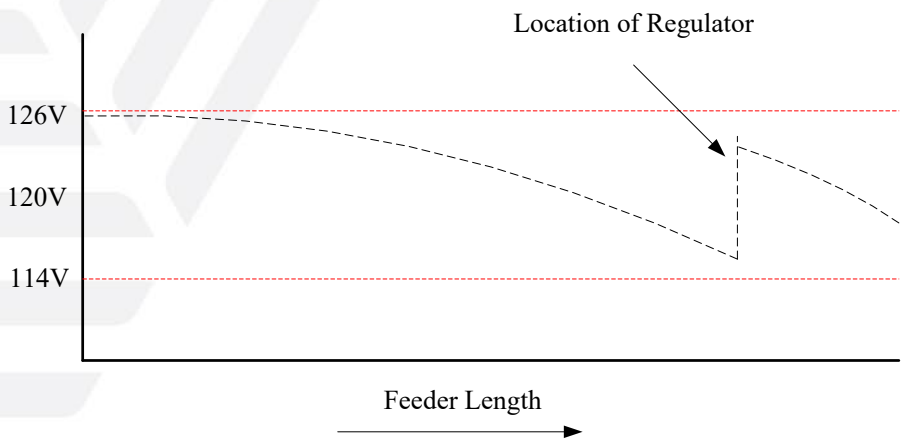

Shunt Capacitors

- Another solution to address voltage drop is the installation of shunt capacitors to reduce the reactive power flows.

- By supplying the leading reactive power locally, this reduces the reactive power needs of the feeder and allows for increased loads to be supported.

- When both voltage regulators and shunt capacitors are used, their set points must be coordinated to prevent “fighting” between units.

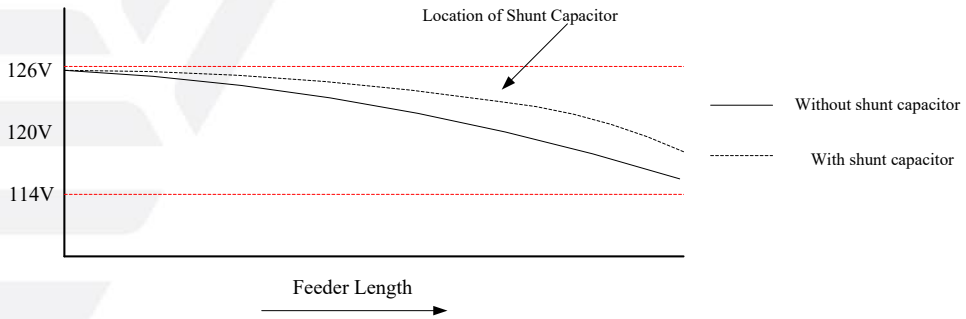

Volt-VAR Optimization (VVO)

- In contrast to the traditional operational methods, Volt-VAR Optimization controls multiple devices, often across more than one circuit, to achieve one or more a global optimums.

- Volt-VAR Optimization, and the associated global optimum(s), exists in many forms.

- The general principle is to control the voltage and reactive power on a distribution feeder so that load can be managed.

- One example of a common "dual-objective" VVO:
  - Primary: Voltage optimization involves "flattening" the voltage profile and possibly lowering the level. This is typically accomplished using the voltage regulators.
  - Secondary: VAR optimization involves controlling the flow of reactive power, which has an impact on voltage. This is typically accomplished using the shunt capacitors.

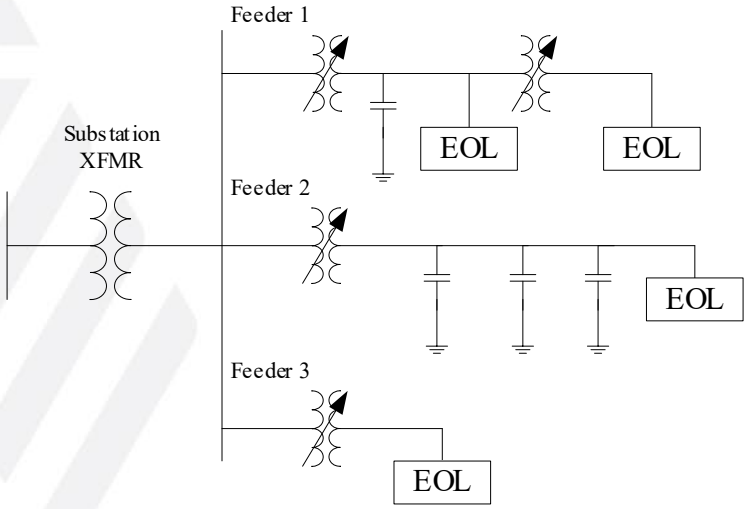

Questions

Kevin Schneider, Ph.D., P.E., FIEEE
Chief Engineer &
Mgr. Distribution and Demand Response Sector
Pacific Northwest National Laboratory
Research Professor, Washington State University
(206) 528-3351
kevin.schneider@pnnl.gov